US008433769B2

(12) **United States Patent**
Cacheria, III et al.

(10) **Patent No.: US 8,433,769 B2**
(45) **Date of Patent: *Apr. 30, 2013**

(54) **SYSTEM FOR PROVIDING TRANSACTION SERVICES TO A PLURALITY OF USER DEVICES**

(75) Inventors: **Anthony M. Cacheria, III**, Coppell, TX (US); **David Hooker**, Forney, TX (US); **Wayne Thomas McHugh**, Little Elm, TX (US); **Kristopher Glover**, Dallas, TX (US); **Webb Edwards**, Lebanon, TN (US); **Arthur Martin Holbrook**, Carrollton, TX (US); **Barrett Jenkins**, Plano, TX (US)

(73) Assignee: **Ganart Technologies, Inc.**, Carrollton, TX (US)

(*) Notice: Subject to any disclaimer, the term of this patent is extended or adjusted under 35 U.S.C. 154(b) by 312 days.

This patent is subject to a terminal disclaimer.

(21) Appl. No.: **12/684,930**

(22) Filed: **Jan. 9, 2010**

(65) **Prior Publication Data**

US 2010/0180000 A1 Jul. 15, 2010

Related U.S. Application Data

(60) Provisional application No. 61/143,480, filed on Jan. 9, 2009, provisional application No. 61/265,028, filed on Nov. 30, 2009.

(51) **Int. Cl.**
G06F 15/16 (2006.01)

(52) **U.S. Cl.**
USPC **709/207**; 709/223; 709/224

(58) **Field of Classification Search** 709/207, 709/223–224
See application file for complete search history.

(56) **References Cited**

U.S. PATENT DOCUMENTS

5,253,167	A	10/1993	Yoshida et al.	
6,775,729	B1 *	8/2004	Matsuo et al.	710/263
6,850,996	B2	2/2005	Wagner	
6,970,846	B1	11/2005	Drummond et al.	

(Continued)

FOREIGN PATENT DOCUMENTS

KR	10-2005-0000772	A	1/2005
KR	10-2010-0001836	A	1/2010

OTHER PUBLICATIONS

PCT: International Search Report and Written Opinion of PCT/US2010/020571 (related application); Jul. 29, 2010; 10 pgs.

Primary Examiner — Emmanuel L Moise
Assistant Examiner — Waseem Ashraf
(74) *Attorney, Agent, or Firm* — Howison & Arnott, L.L.P.

(57) **ABSTRACT**

A system for providing access to a plurality of services from third party service providers to users at remote locations includes a plurality of resource managers having associated physical system resources for enabling a user to access a user selected service each resource manager including a processing platform with an operating system running thereon, a data store, including configuration information for each of the services available to a user through the resource manager, wherein there are multiple configurations associated with different ones of the predetermined services and one or more of the available physical system resources, and central processing center that communicates with each of the plurality of resource managers to enable or disable selected ones of the services on given ones of the resource managers based upon predetermined criteria and operates in conjunction with the resource managers to execute predetermined sequences of actions for accessing user selected ones of the services from the service providers providing such services.

9 Claims, 22 Drawing Sheets

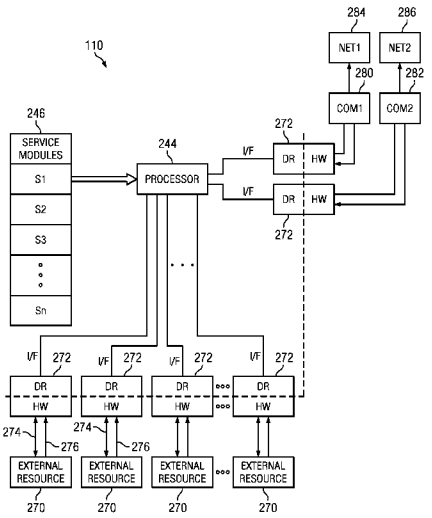

U.S. PATENT DOCUMENTS

7,025,255	B1	4/2006	Drummond et al.	
7,051,096	B1	5/2006	Krawiec et al.	
7,062,464	B1	6/2006	Drummond et al.	
7,472,824	B2	1/2009	Ramachandran	
7,543,020	B2 *	6/2009	Walker et al.	709/203
7,716,096	B2	5/2010	Drummond et al.	
7,725,393	B2	5/2010	Drummond et al.	
7,747,527	B1 *	6/2010	Korala	705/43
7,930,340	B2 *	4/2011	Arunachalam	709/203
2002/0032655	A1 *	3/2002	Antonin et al.	705/43
2002/0169790	A1 *	11/2002	Lee	707/104.1
2002/0194242	A1	12/2002	Chandrasekaran et al.	
2004/0139018	A1 *	7/2004	Anderson et al.	705/41
2005/0066331	A1 *	3/2005	Inoue et al.	718/104
2005/0262182	A1	11/2005	Thole	
2006/0050862	A1 *	3/2006	Shen et al.	379/219
2007/0130338	A1 *	6/2007	Malik et al.	709/225
2007/0198432	A1 *	8/2007	Pitroda et al.	705/64
2007/0198665	A1 *	8/2007	De Matteis et al.	709/220
2007/0226785	A1 *	9/2007	Chow et al.	726/8
2007/0234410	A1 *	10/2007	Geller	726/8
2008/0191008	A1 *	8/2008	Manfredi et al.	235/379
2009/0100178	A1 *	4/2009	Gonzales et al.	709/226
2009/0150711	A1 *	6/2009	Kami et al.	714/1
2010/0005461	A1 *	1/2010	Shribman et al.	717/177
2010/0179990	A1 *	7/2010	Cacheria et al.	709/204
2010/0180018	A1 *	7/2010	Cacheria et al.	709/220
2010/0180031	A1 *	7/2010	Cacheria et al.	709/225
2011/0173301	A1 *	7/2011	Huang et al.	709/219

* cited by examiner

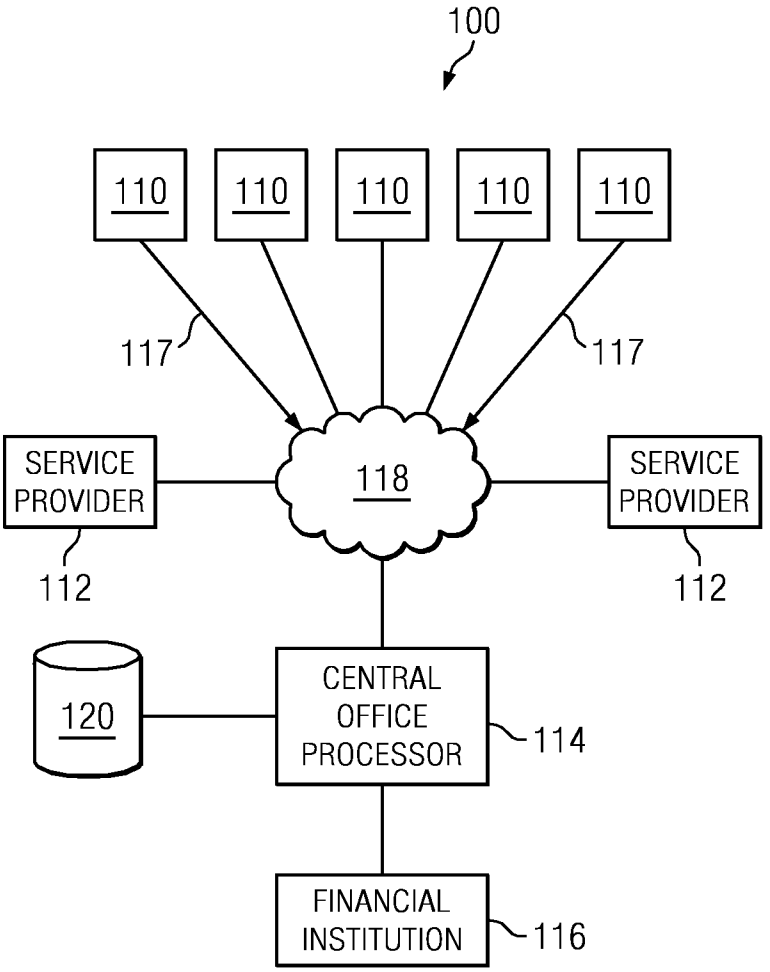
100
110
110
110
110
110
117
117
SERVICE PROVIDER
118
SERVICE PROVIDER
112
112
120
CENTRAL OFFICE PROCESSOR
114
FINANCIAL INSTITUTION
116

FIG. 1

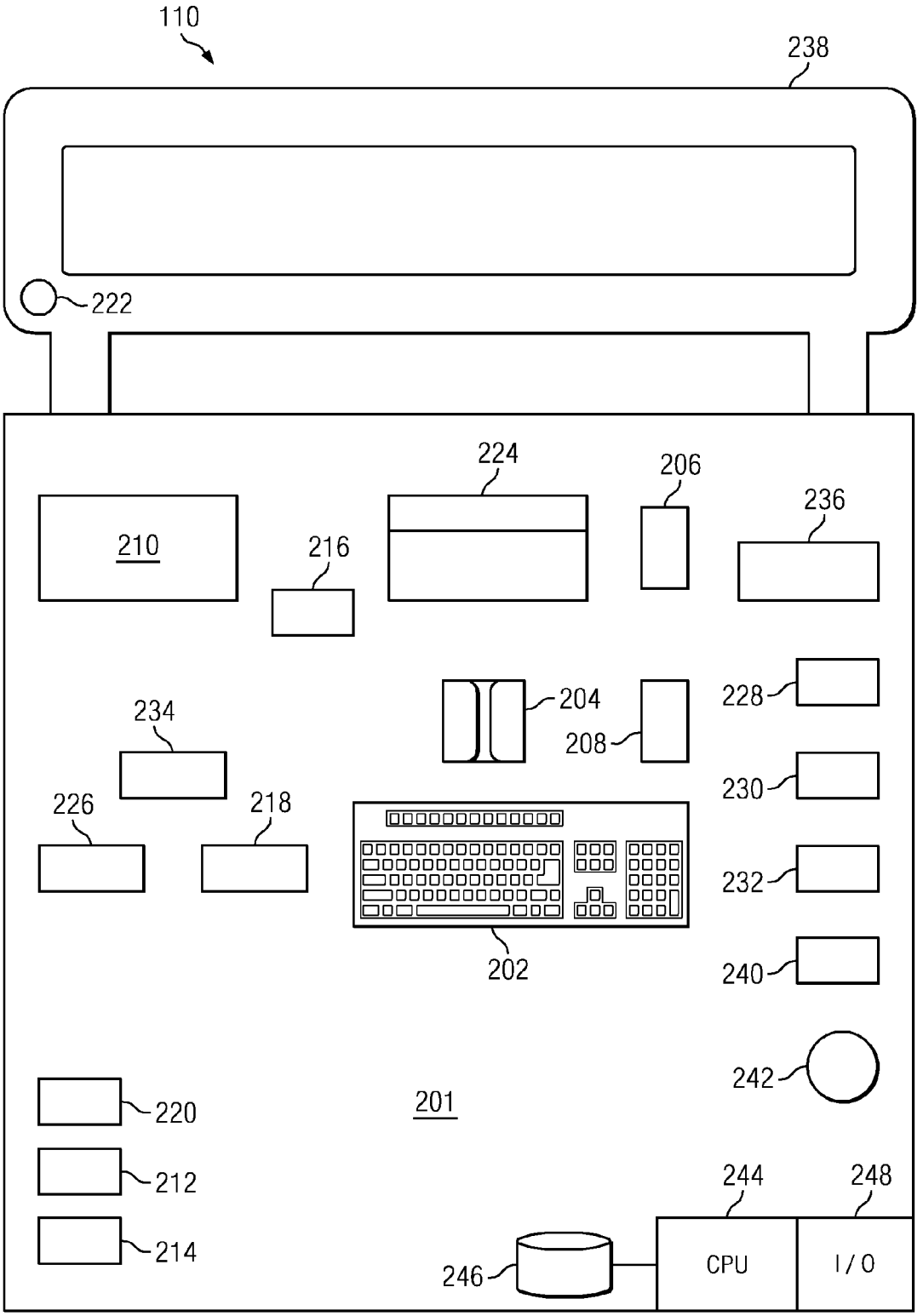
110
238
222
224
206
236
210
216
204
228
208
234
230
226
218
232
202
240
242
201
220
212
244
248
214
246
CPU
I/O

FIG. 2A

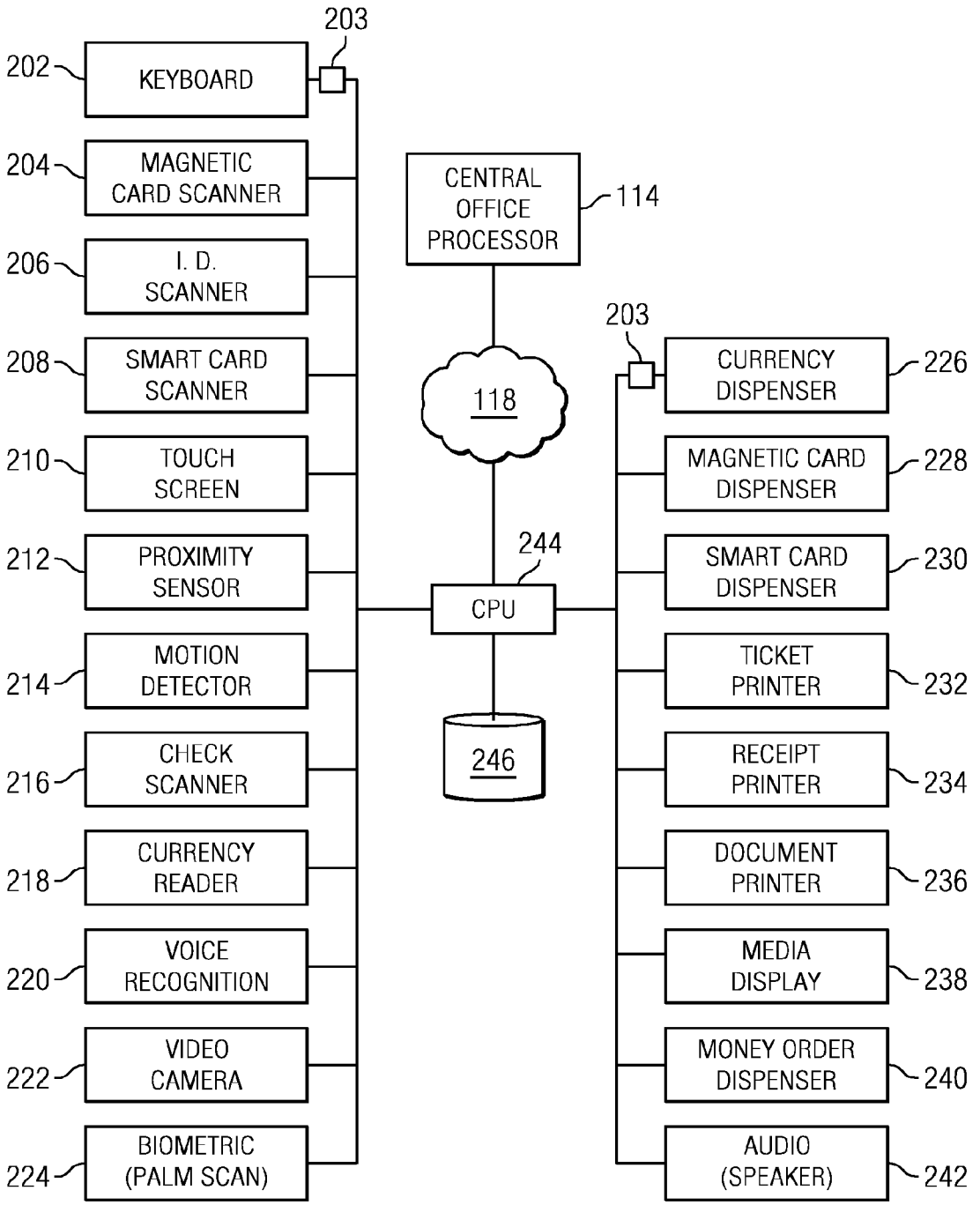
203
202
KEYBOARD
204
MAGNETIC CARD SCANNER
206
I. D. SCANNER
208
SMART CARD SCANNER
210
TOUCH SCREEN
212
PROXIMITY SENSOR
214
MOTION DETECTOR
216
CHECK SCANNER
218
CURRENCY READER
220
VOICE RECOGNITION
222
VIDEO CAMERA
224
BIOMETRIC (PALM SCAN)
CENTRAL OFFICE PROCESSOR
114
118
244
CPU
246
203
CURRENCY DISPENSER
226
MAGNETIC CARD DISPENSER
228
SMART CARD DISPENSER
230
TICKET PRINTER
232
RECEIPT PRINTER
234
DOCUMENT PRINTER
236
MEDIA DISPLAY
238
MONEY ORDER DISPENSER
240
AUDIO (SPEAKER)
242

FIG. 2B

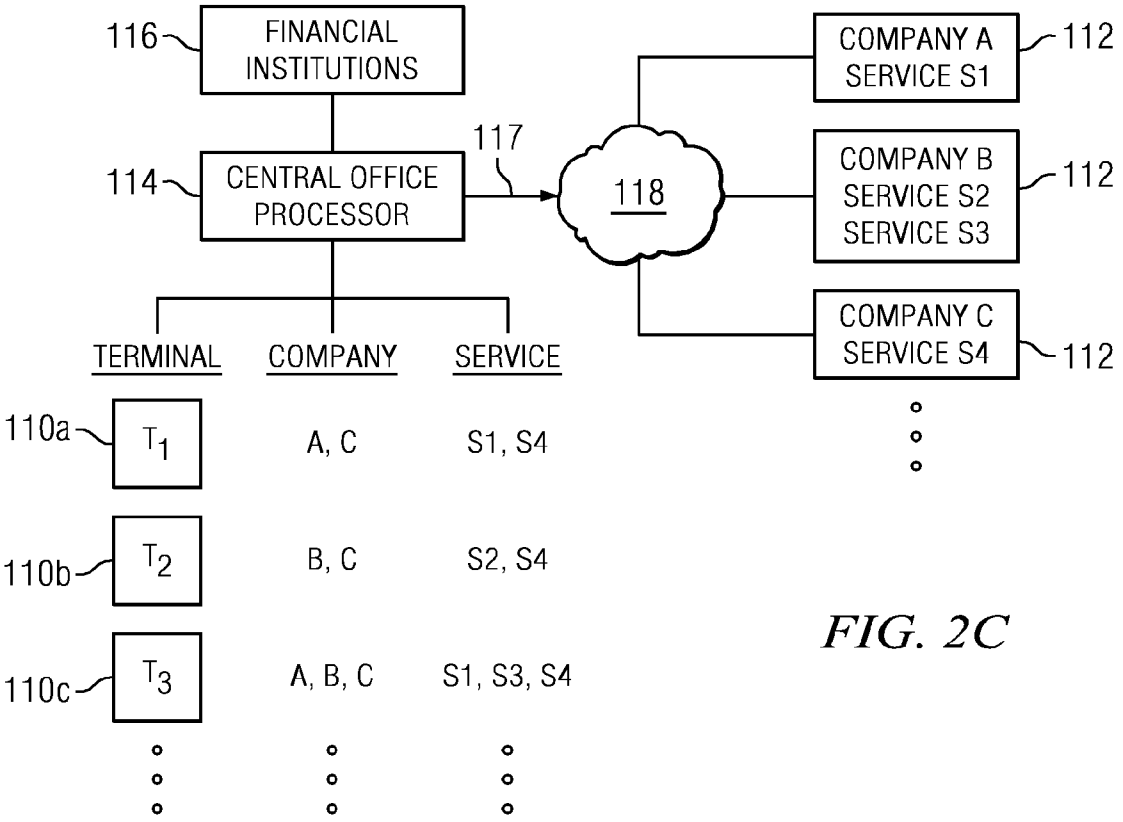
116
FINANCIAL INSTITUTIONS
114
CENTRAL OFFICE PROCESSOR
117
118
COMPANY A SERVICE S1
112
COMPANY B SERVICE S2 SERVICE S3
112
COMPANY C SERVICE S4
112
TERMINAL
COMPANY
SERVICE
110a
T1
A, C
S1, S4
110b
T2
B, C
S2, S4
110c
T3
A, B, C
S1, S3, S4

FIG. 2C

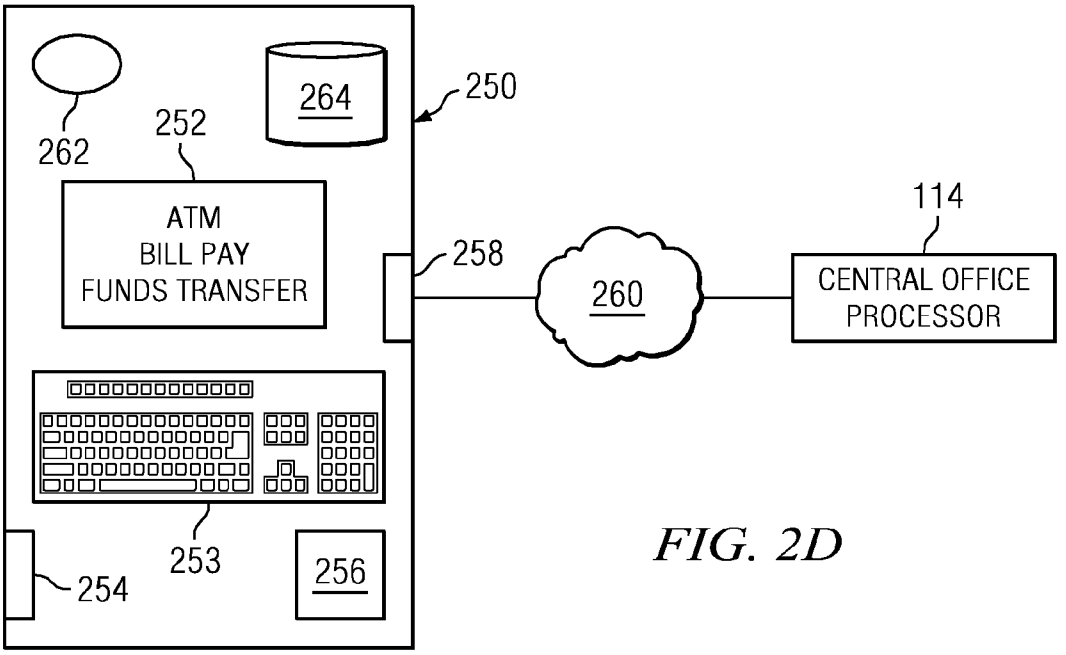
262
252
264
250
ATM BILL PAY FUNDS TRANSFER
258
260
114
CENTRAL OFFICE PROCESSOR
253
254
256

FIG. 2D

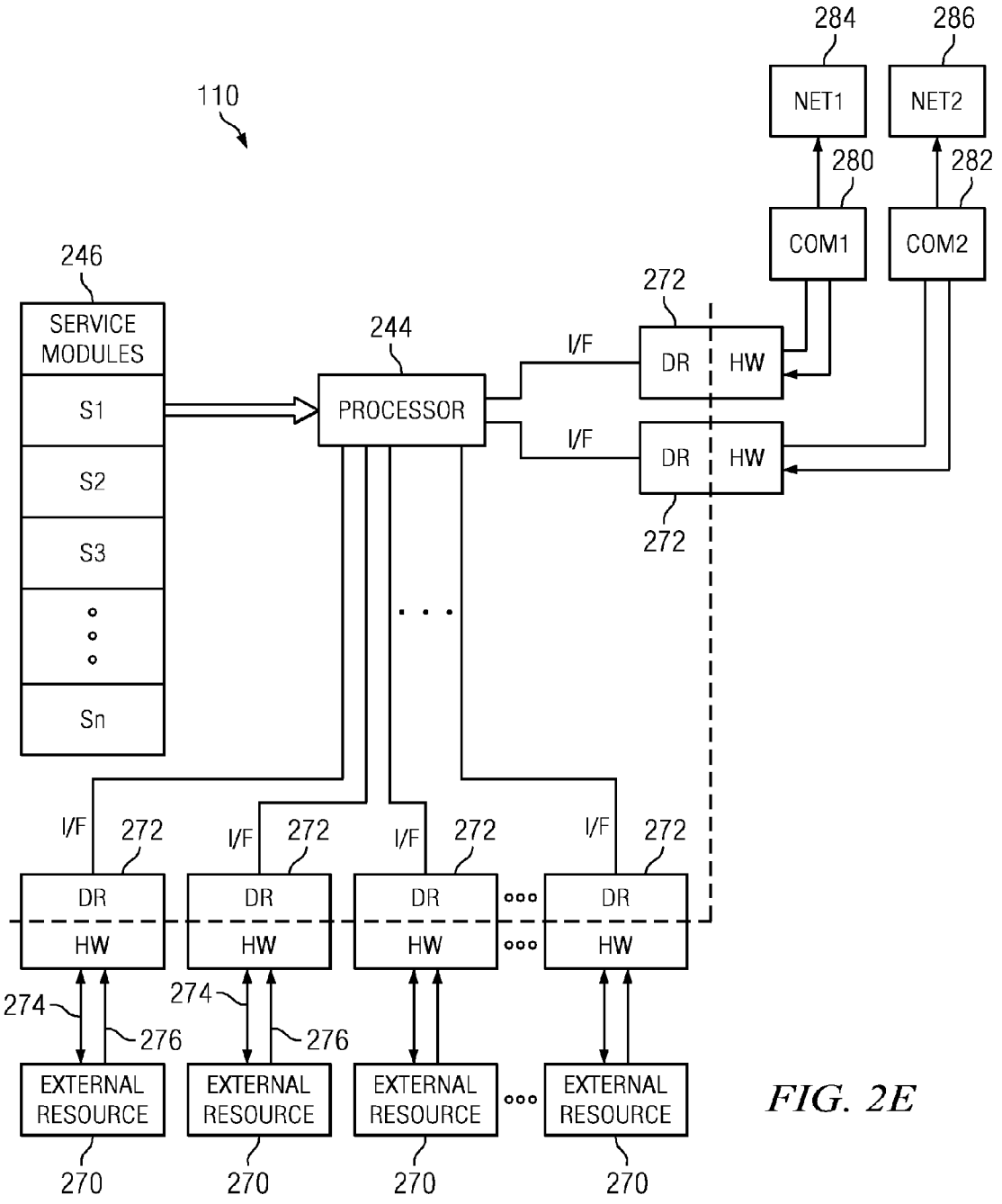
110
284
286
NET1
NET2
280
282
COM1
COM2
246
SERVICE MODULES
S1
S2
S3
Sn
244
PROCESSOR
I/F
272
DR
HW
I/F
DR
HW
272
I/F
272
DR
HW
I/F
272
DR
HW
I/F
272
DR
HW
I/F
272
DR
HW
274
276
274
276
EXTERNAL RESOURCE
EXTERNAL RESOURCE
EXTERNAL RESOURCE
EXTERNAL RESOURCE
270
270
270
270

FIG. 2E

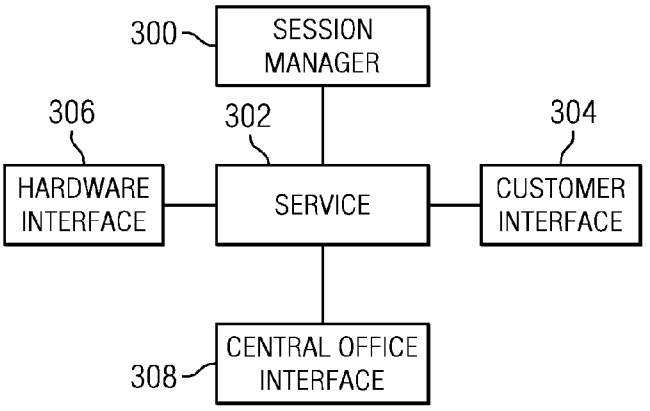

FIG. 3

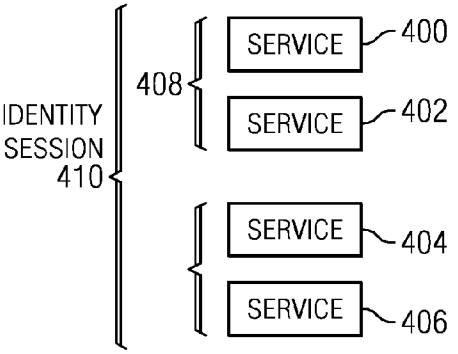

FIG. 4A

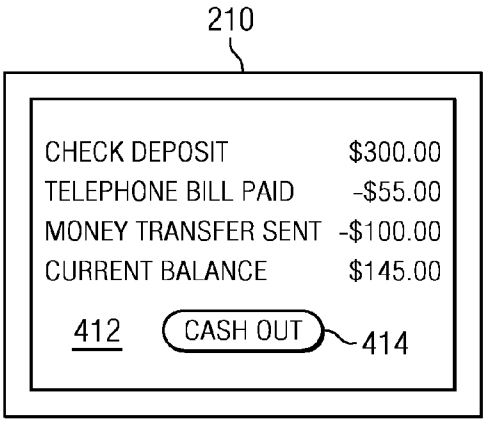

FIG. 4B

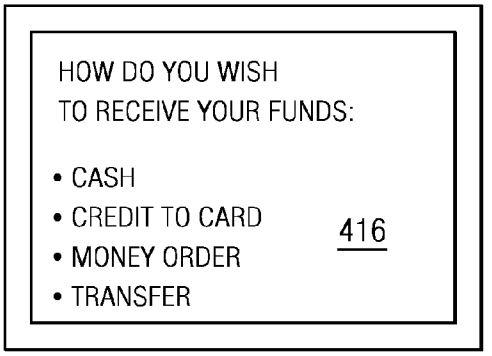

FIG. 4C

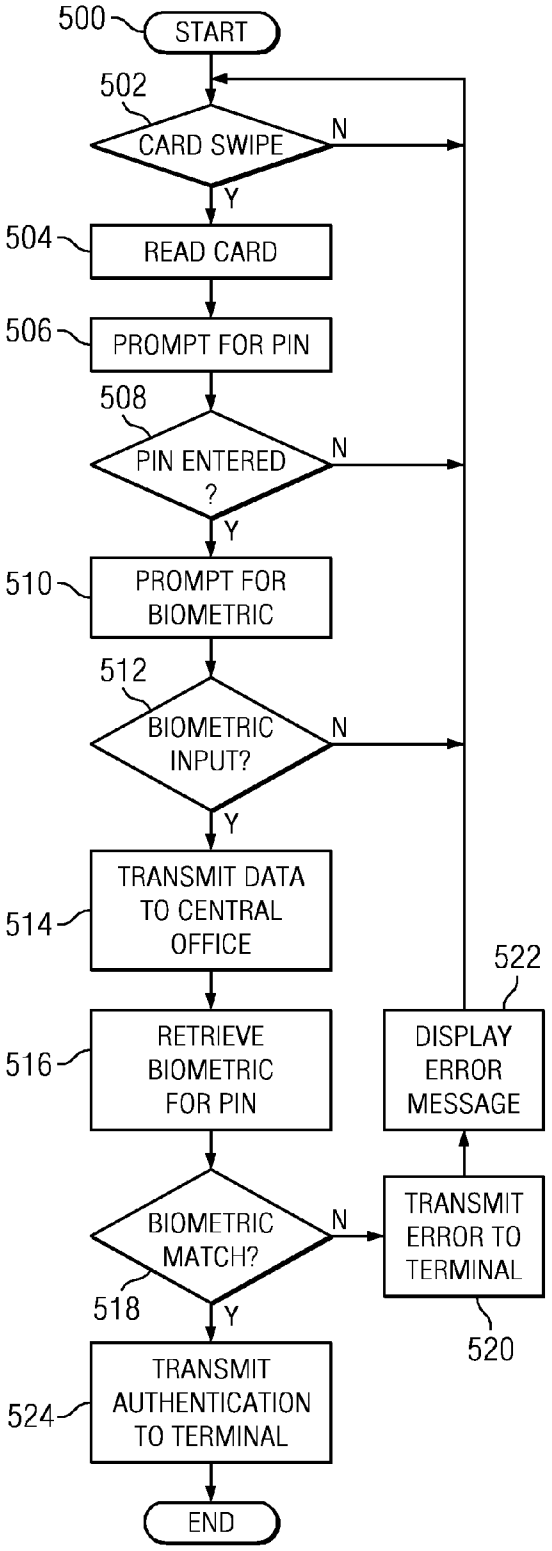
500
START
502
CARD SWIPE
N
Y
504
READ CARD
506
PROMPT FOR PIN
508
PIN ENTERED ?
N
Y
510
PROMPT FOR BIOMETRIC
512
BIOMETRIC INPUT?
N
Y
514
TRANSMIT DATA TO CENTRAL OFFICE
516
RETRIEVE BIOMETRIC FOR PIN
522
DISPLAY ERROR MESSAGE
BIOMETRIC MATCH?
N
518
Y
TRANSMIT ERROR TO TERMINAL
520
524
TRANSMIT AUTHENTICATION TO TERMINAL
END

FIG. 5

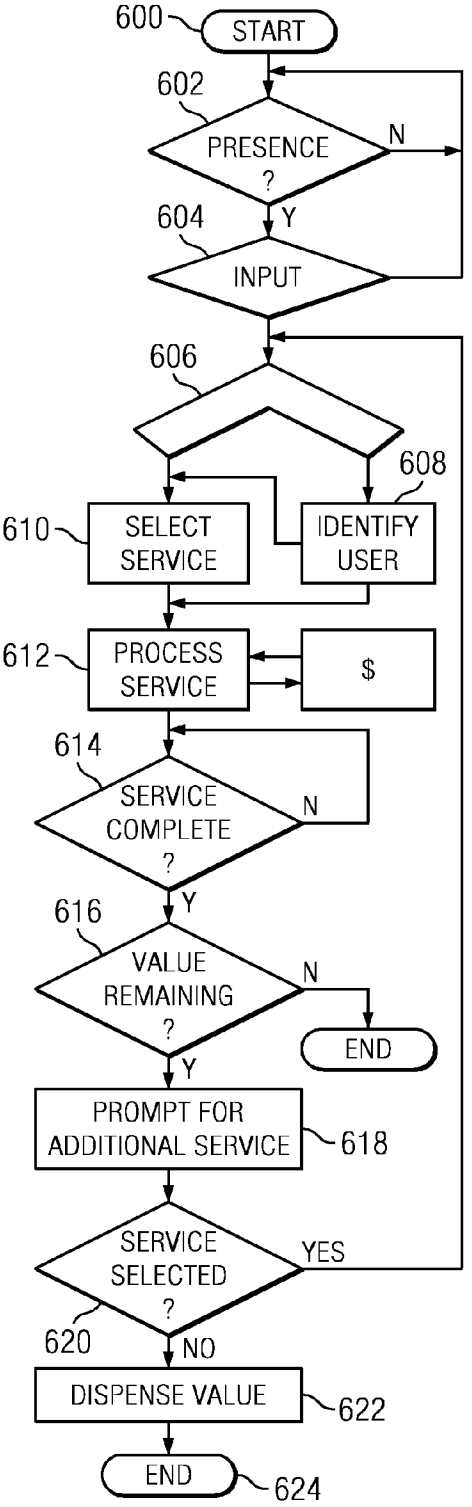
600
START
602
PRESENCE ?
N
Y
604
INPUT
606
608
610
SELECT SERVICE
IDENTIFY USER
612
PROCESS SERVICE
$
614
SERVICE COMPLETE ?
N
Y
616
VALUE REMAINING ?
N
END
Y
PROMPT FOR ADDITIONAL SERVICE
618
SERVICE SELECTED ?
YES
620
NO
DISPENSE VALUE
622
END
624

FIG. 6

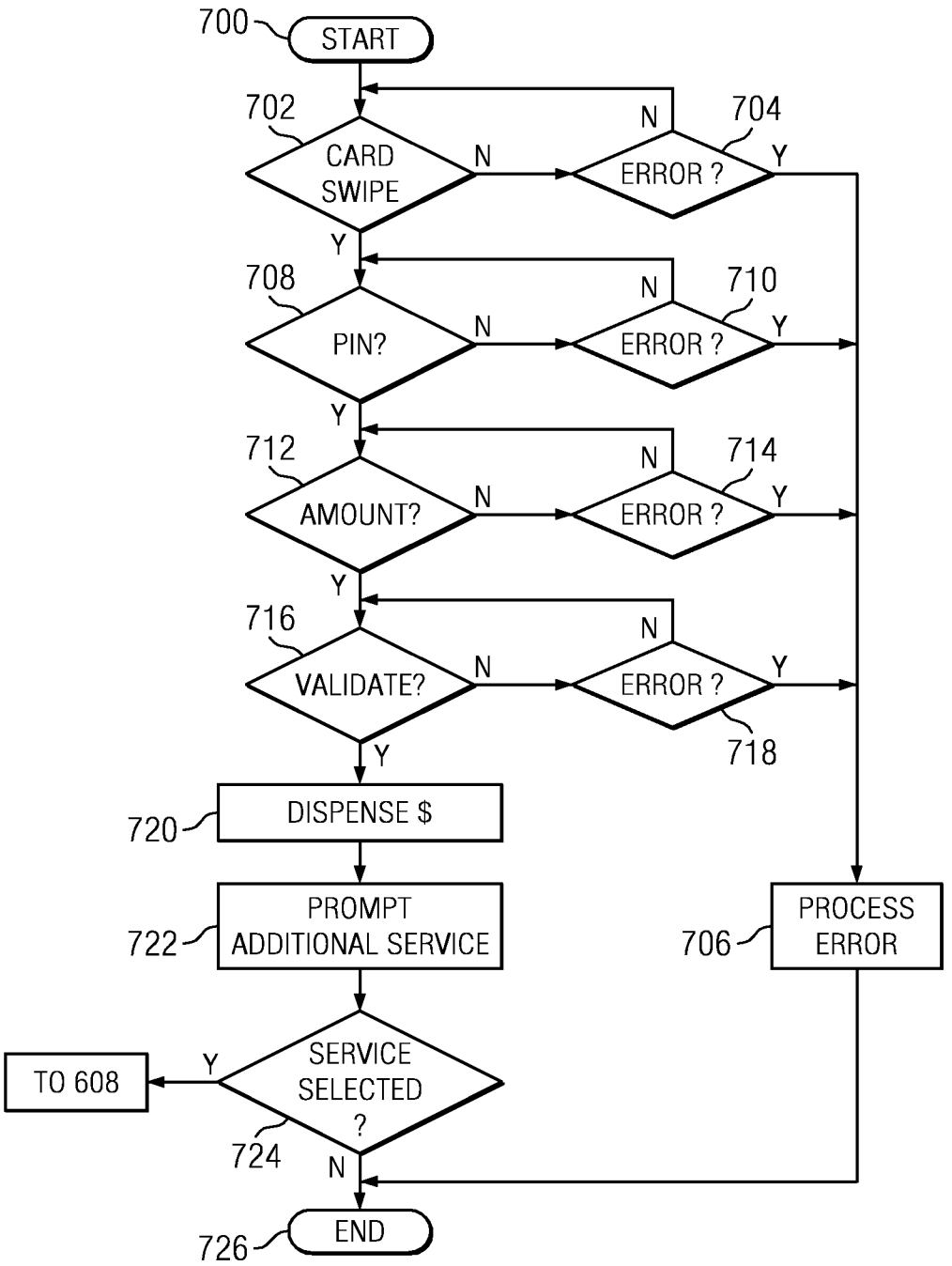
700
START
702
CARD SWIPE
N
704
ERROR ?
N
Y
Y
708
PIN?
N
710
ERROR ?
N
Y
Y
712
AMOUNT?
N
714
ERROR ?
N
Y
Y
716
VALIDATE?
N
ERROR ?
N
Y
718
Y
720
DISPENSE $
722
PROMPT ADDITIONAL SERVICE
706
PROCESS ERROR
TO 608
Y
SERVICE SELECTED ?
724
N
726
END

FIG. 7

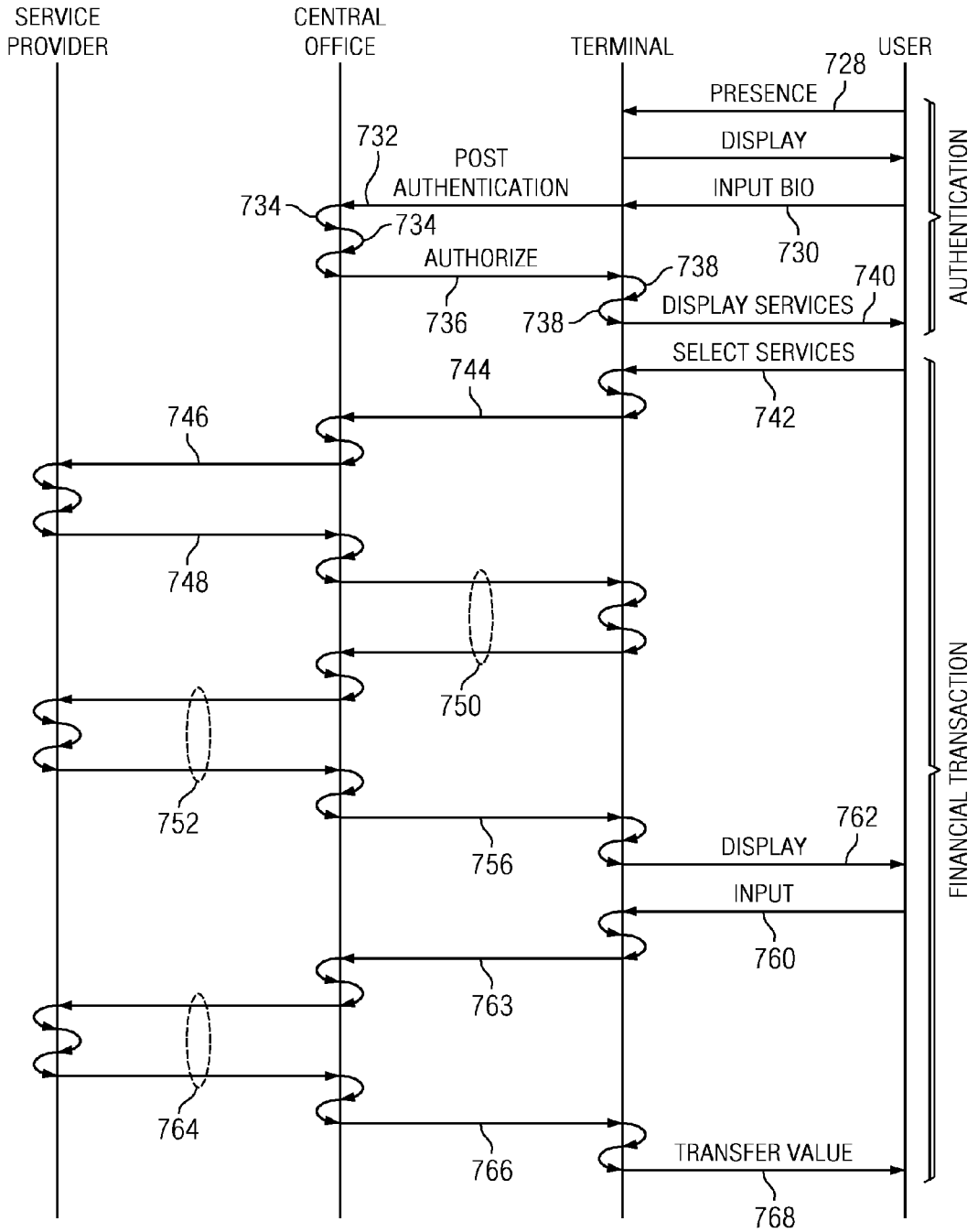
SERVICE PROVIDER
CENTRAL OFFICE
TERMINAL
USER
728
PRESENCE
DISPLAY
732
POST AUTHENTICATION
INPUT BIO
734
734
730
AUTHORIZE
738
740
736
738
DISPLAY SERVICES
AUTHENTICATION
SELECT SERVICES
744
742
746
748
750
752
756
762
DISPLAY
INPUT
760
763
764
766
TRANSFER VALUE
768
FINANCIAL TRANSACTION

FIG. 7A

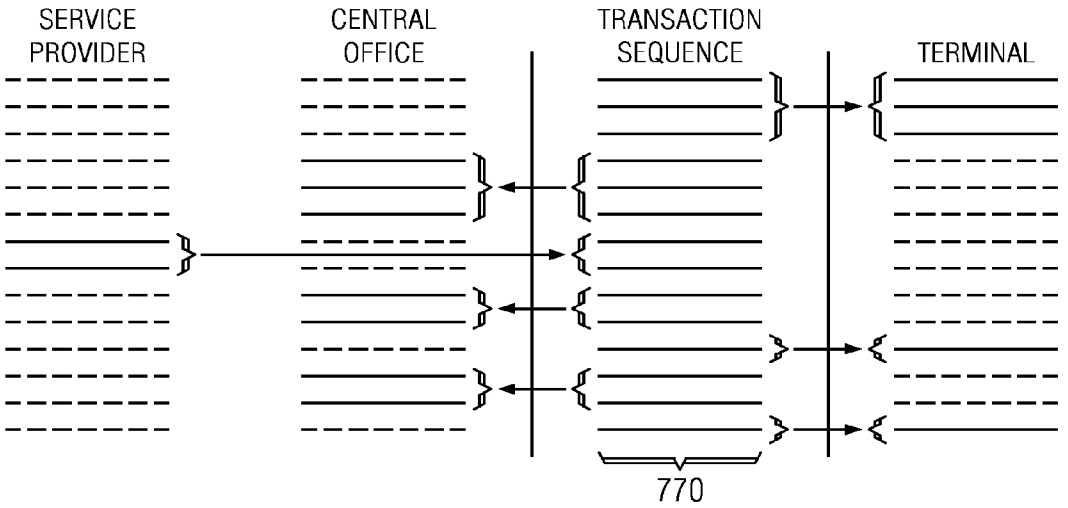
SERVICE PROVIDER
CENTRAL OFFICE
TRANSACTION SEQUENCE
TERMINAL
770

FIG. 7B

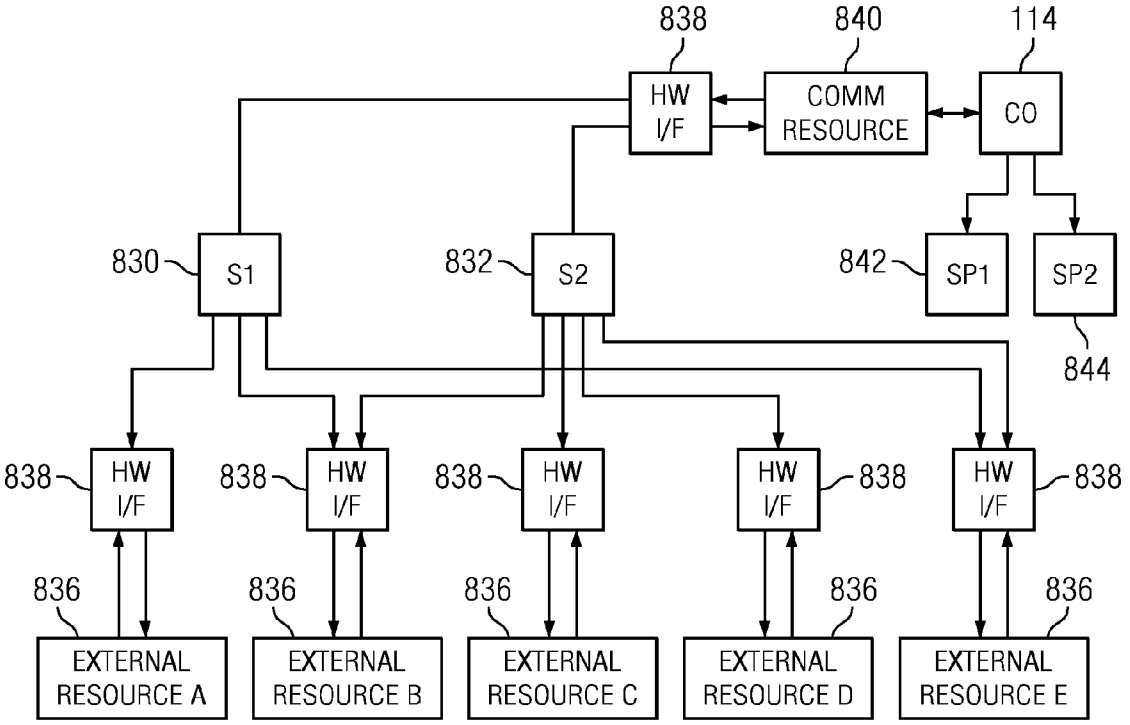
838
840
114
HW I/F
COMM RESOURCE
CO
830
S1
832
S2
842
SP1
SP2
844
838
HW I/F
836
EXTERNAL RESOURCE A
EXTERNAL RESOURCE B
EXTERNAL RESOURCE C
EXTERNAL RESOURCE D
EXTERNAL RESOURCE E

FIG. 8A

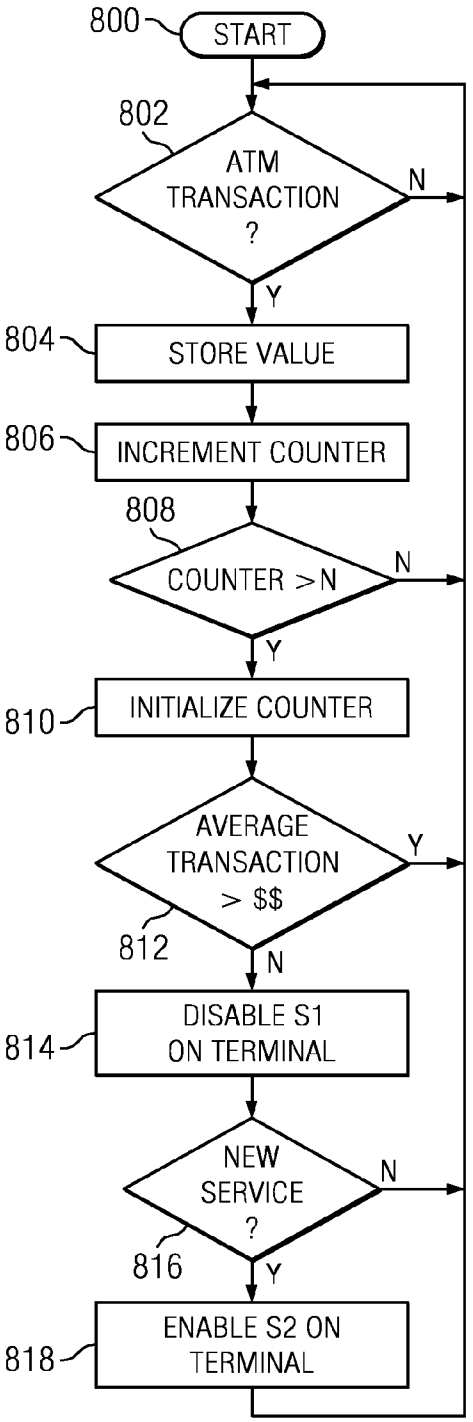
800
START
802
ATM TRANSACTION ?
N
Y
804
STORE VALUE
806
INCREMENT COUNTER
808
COUNTER >N
N
Y
810
INITIALIZE COUNTER
AVERAGE TRANSACTION > $$
Y
812
N
814
DISABLE S1 ON TERMINAL
NEW SERVICE ?
N
816
Y
818
ENABLE S2 ON TERMINAL

FIG. 8

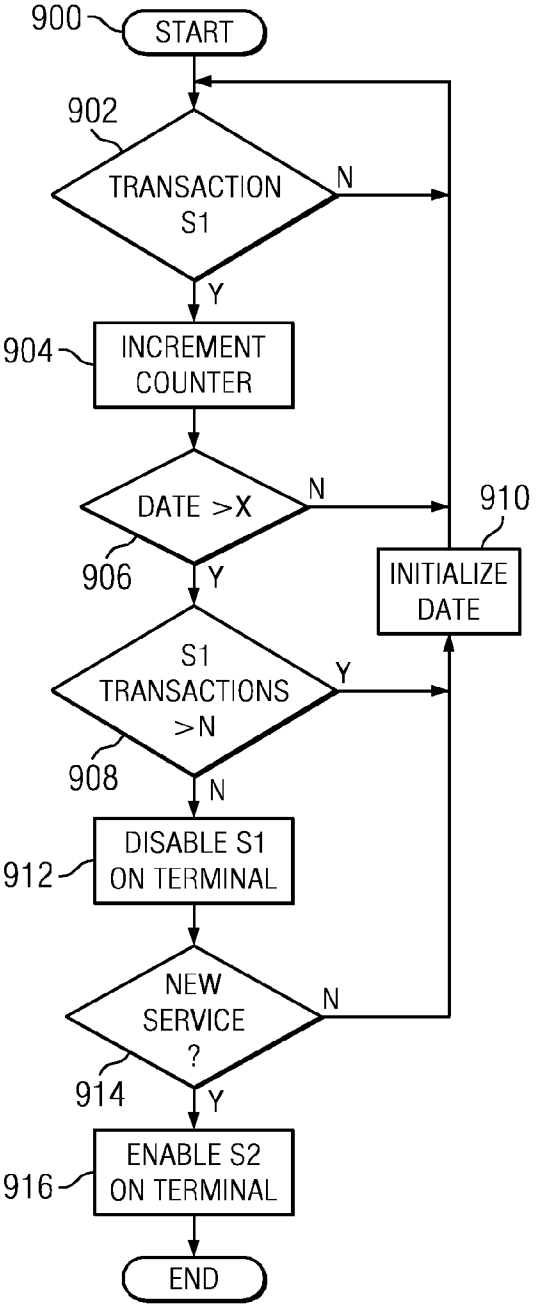
900
START
902
TRANSACTION S1
N
Y
904
INCREMENT COUNTER
DATE >X
N
910
906
Y
INITIALIZE DATE
S1 TRANSACTIONS >N
Y
908
N
912
DISABLE S1 ON TERMINAL
NEW SERVICE ?
N
914
Y
916
ENABLE S2 ON TERMINAL
END

FIG. 9

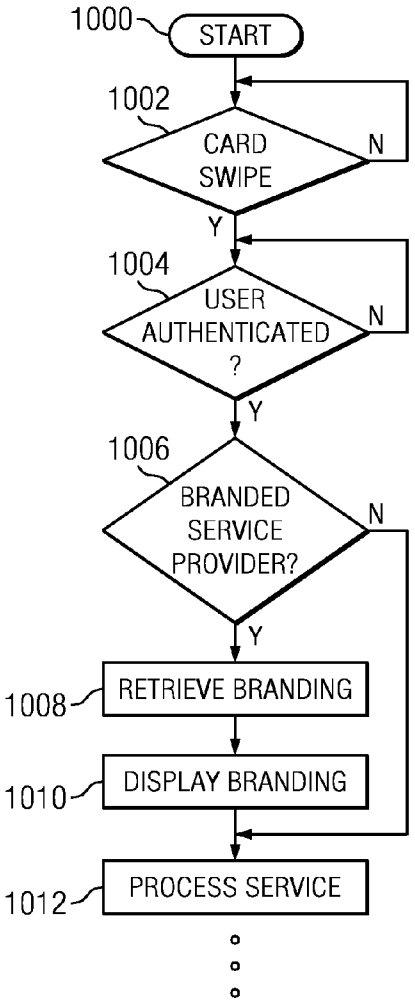
1000
START
1002
CARD SWIPE
N
Y
1004
USER AUTHENTICATED ?
N
Y
1006
BRANDED SERVICE PROVIDER?
N
Y
1008
RETRIEVE BRANDING
1010
DISPLAY BRANDING
1012
PROCESS SERVICE

FIG. 10

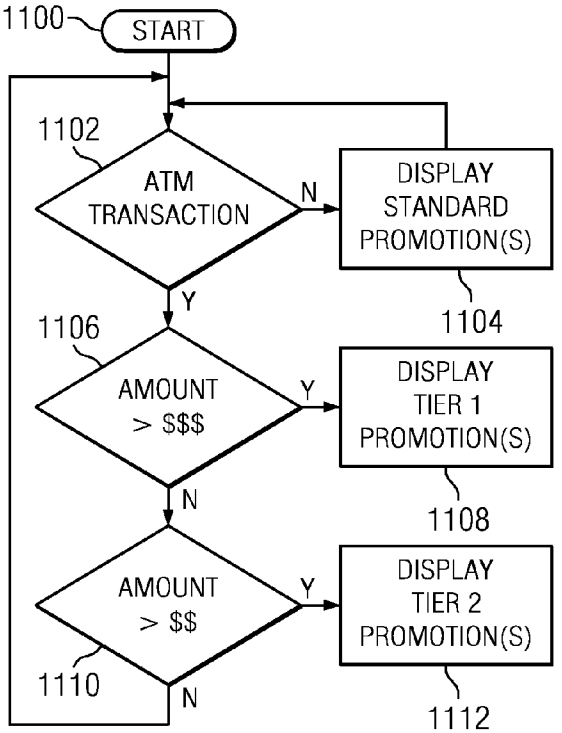
1100
START
1102
ATM TRANSACTION
N
DISPLAY STANDARD PROMOTION(S)
1104
Y
1106
AMOUNT > $$$
Y
DISPLAY TIER 1 PROMOTION(S)
1108
N
AMOUNT > $$
Y
DISPLAY TIER 2 PROMOTION(S)
1112
1110
N

FIG. 11

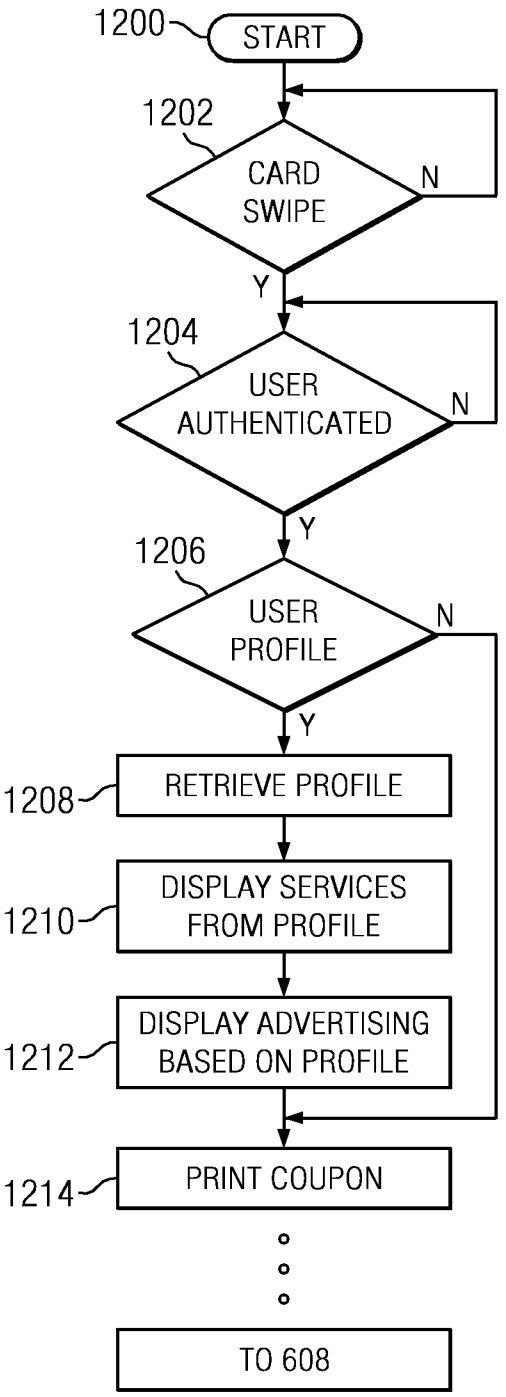
1200
START
1202
CARD SWIPE
N
Y
1204
USER AUTHENTICATED
N
Y
1206
USER PROFILE
N
Y
1208
RETRIEVE PROFILE
1210
DISPLAY SERVICES FROM PROFILE
1212
DISPLAY ADVERTISING BASED ON PROFILE
1214
PRINT COUPON
TO 608

FIG. 12

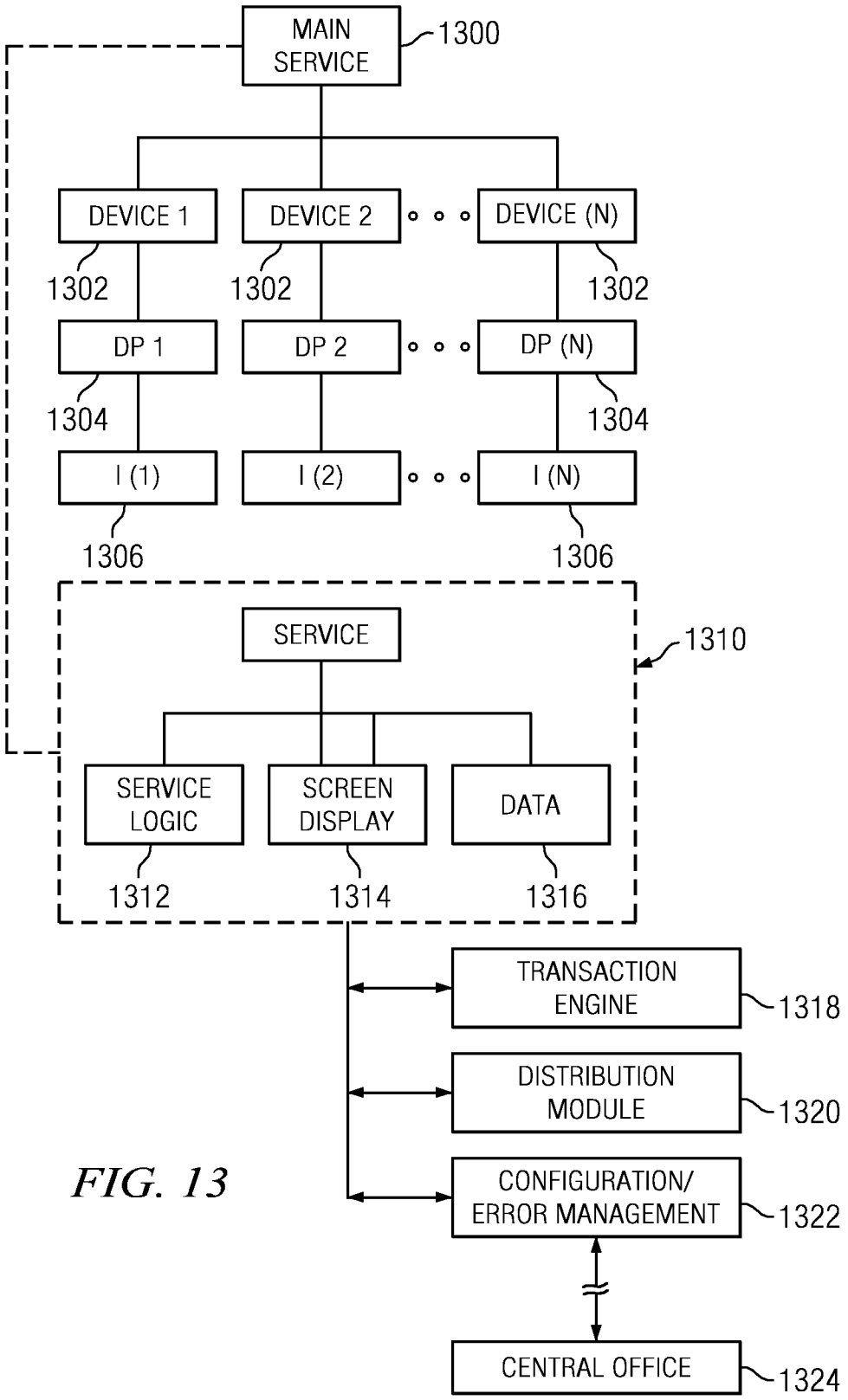
MAIN SERVICE
1300
DEVICE 1
DEVICE 2
DEVICE (N)
1302
1302
1302
DP 1
DP 2
DP (N)
1304
1304
I (1)
I (2)
I (N)
1306
1306
SERVICE
1310
SERVICE LOGIC
SCREEN DISPLAY
DATA
1312
1314
1316
TRANSACTION ENGINE
1318
DISTRIBUTION MODULE
1320
CONFIGURATION/ ERROR MANAGEMENT
1322
CENTRAL OFFICE
1324

FIG. 13

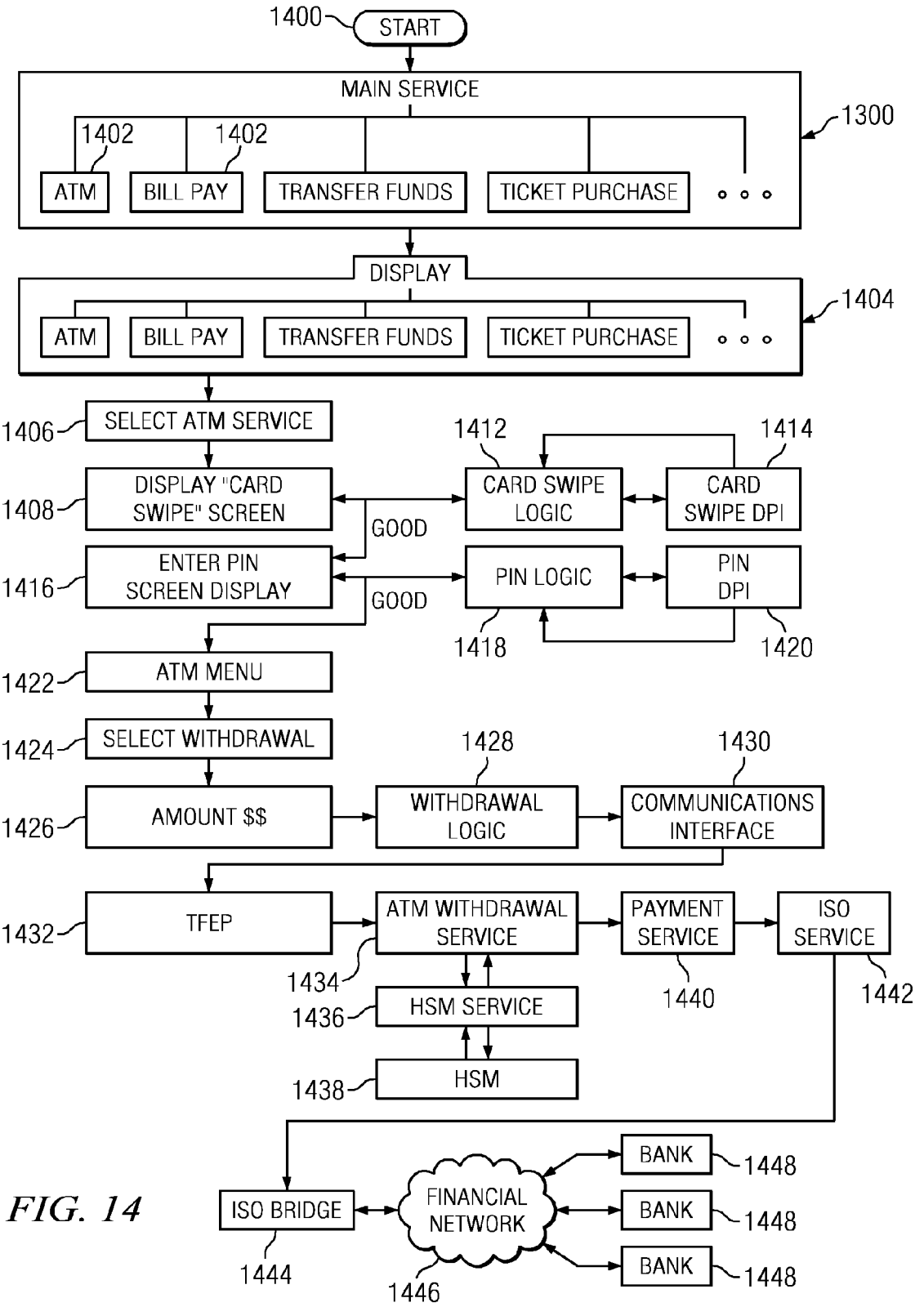
1400
START
MAIN SERVICE
1300
1402
1402
ATM
BILL PAY
TRANSFER FUNDS
TICKET PURCHASE
DISPLAY
1404
ATM
BILL PAY
TRANSFER FUNDS
TICKET PURCHASE
1406
SELECT ATM SERVICE
1412
1414
1408
DISPLAY "CARD SWIPE" SCREEN
CARD SWIPE LOGIC
CARD SWIPE DPI
GOOD
1416
ENTER PIN SCREEN DISPLAY
PIN LOGIC
PIN DPI
GOOD
1418
1420
1422
ATM MENU
1424
SELECT WITHDRAWAL
1428
1430
1426
AMOUNT $$
WITHDRAWAL LOGIC
COMMUNICATIONS INTERFACE
1432
TFEP
ATM WITHDRAWAL SERVICE
PAYMENT SERVICE
ISO SERVICE
1434
1440
1442
1436
HSM SERVICE
1438
HSM
BANK
1448
ISO BRIDGE
FINANCIAL NETWORK
BANK
1448
1444
1446
BANK
1448

FIG. 14

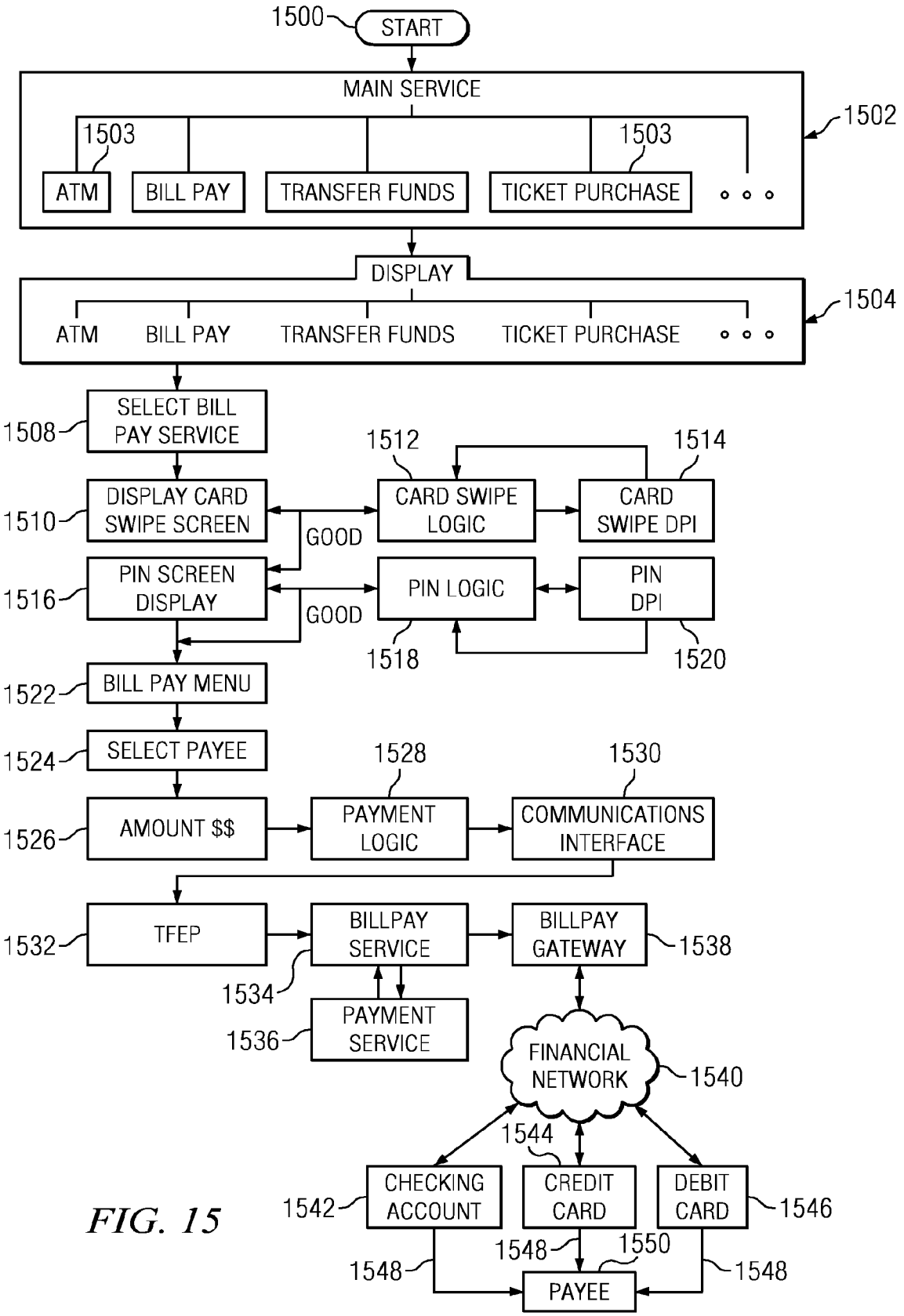
1500
START
MAIN SERVICE
1502
1503
1503
ATM
BILL PAY
TRANSFER FUNDS
TICKET PURCHASE
DISPLAY
1504
ATM
BILL PAY
TRANSFER FUNDS
TICKET PURCHASE
1508
SELECT BILL PAY SERVICE
1512
1514
1510
DISPLAY CARD SWIPE SCREEN
CARD SWIPE LOGIC
CARD SWIPE DPI
GOOD
1516
PIN SCREEN DISPLAY
PIN LOGIC
PIN DPI
GOOD
1518
1520
1522
BILL PAY MENU
1524
SELECT PAYEE
1528
1530
1526
AMOUNT $$
PAYMENT LOGIC
COMMUNICATIONS INTERFACE
1532
TFEP
BILLPAY SERVICE
BILLPAY GATEWAY
1538
1534
1536
PAYMENT SERVICE
FINANCIAL NETWORK
1540
1544
1542
CHECKING ACCOUNT
CREDIT CARD
DEBIT CARD
1546
1548
1550
1548
1548
PAYEE

FIG. 15

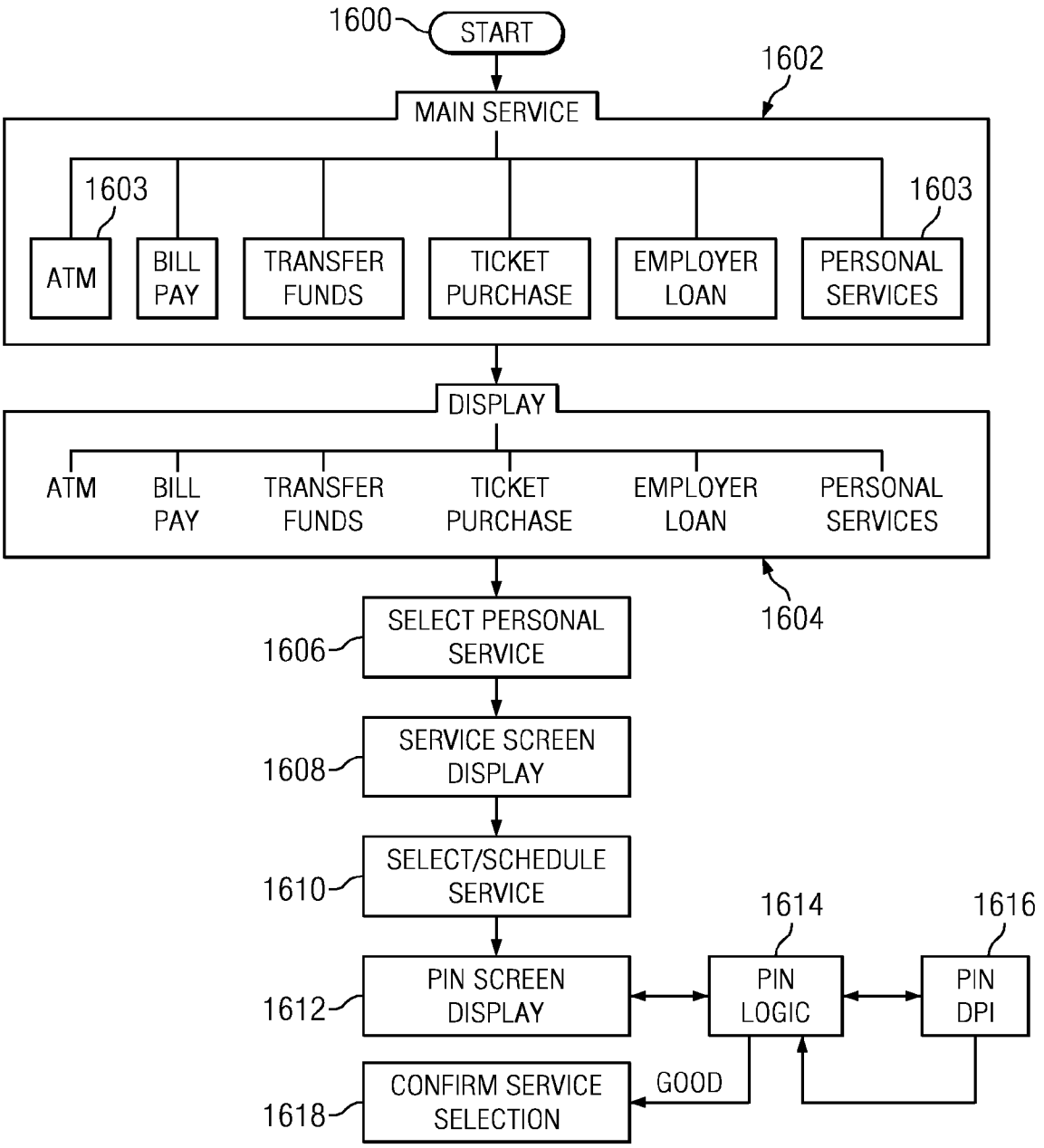
1600
START
1602
MAIN SERVICE
1603
1603
ATM
BILL PAY
TRANSFER FUNDS
TICKET PURCHASE
EMPLOYER LOAN
PERSONAL SERVICES
DISPLAY
ATM
BILL PAY
TRANSFER FUNDS
TICKET PURCHASE
EMPLOYER LOAN
PERSONAL SERVICES
1604
1606
SELECT PERSONAL SERVICE
1608
SERVICE SCREEN DISPLAY
1610
SELECT/SCHEDULE SERVICE
1614
1616
1612
PIN SCREEN DISPLAY
PIN LOGIC
PIN DPI
1618
CONFIRM SERVICE SELECTION
GOOD

FIG. 16

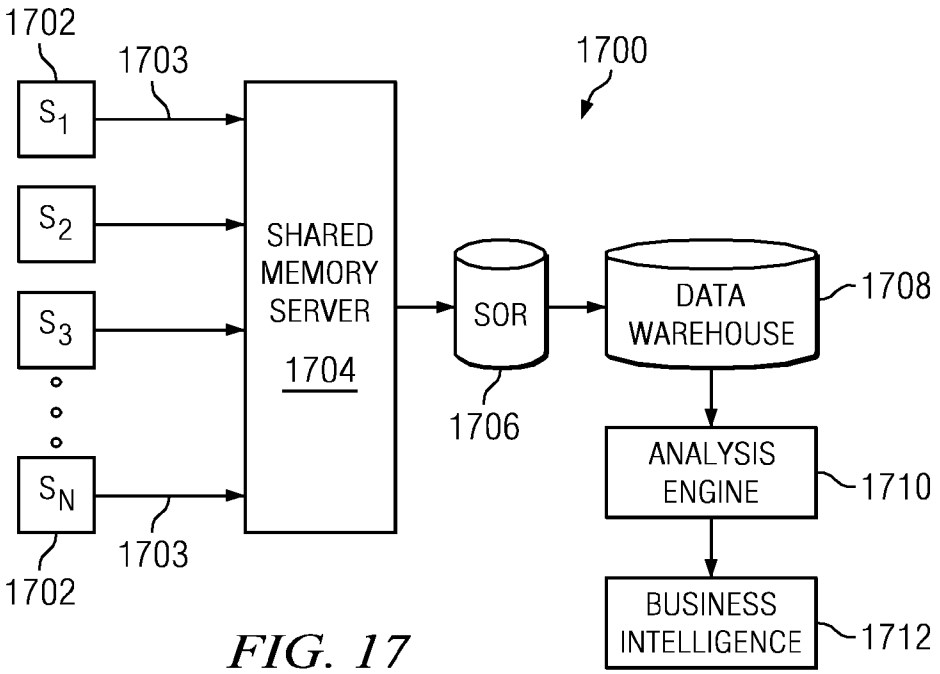

FIG. 17

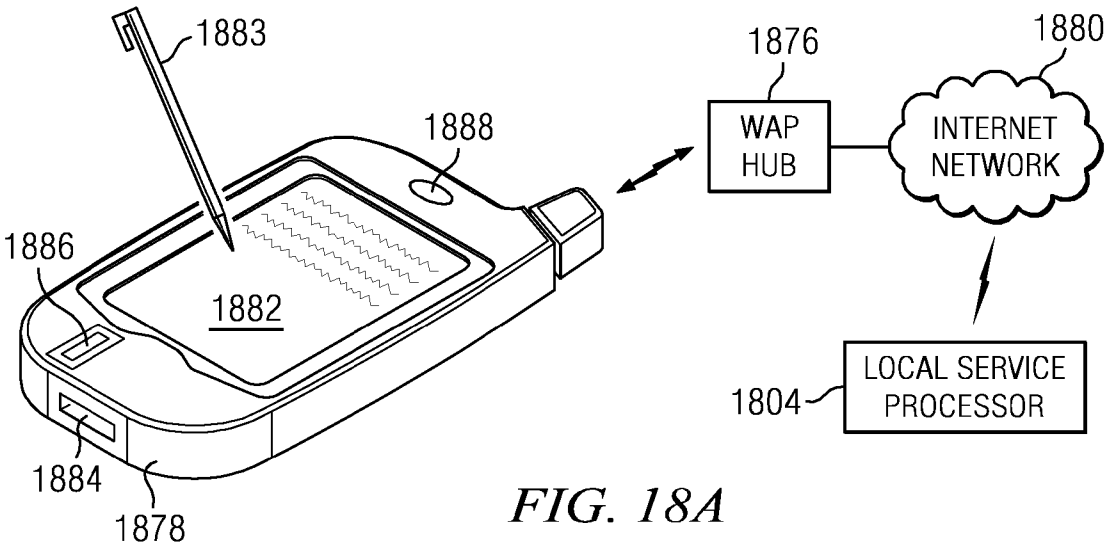

FIG. 18A

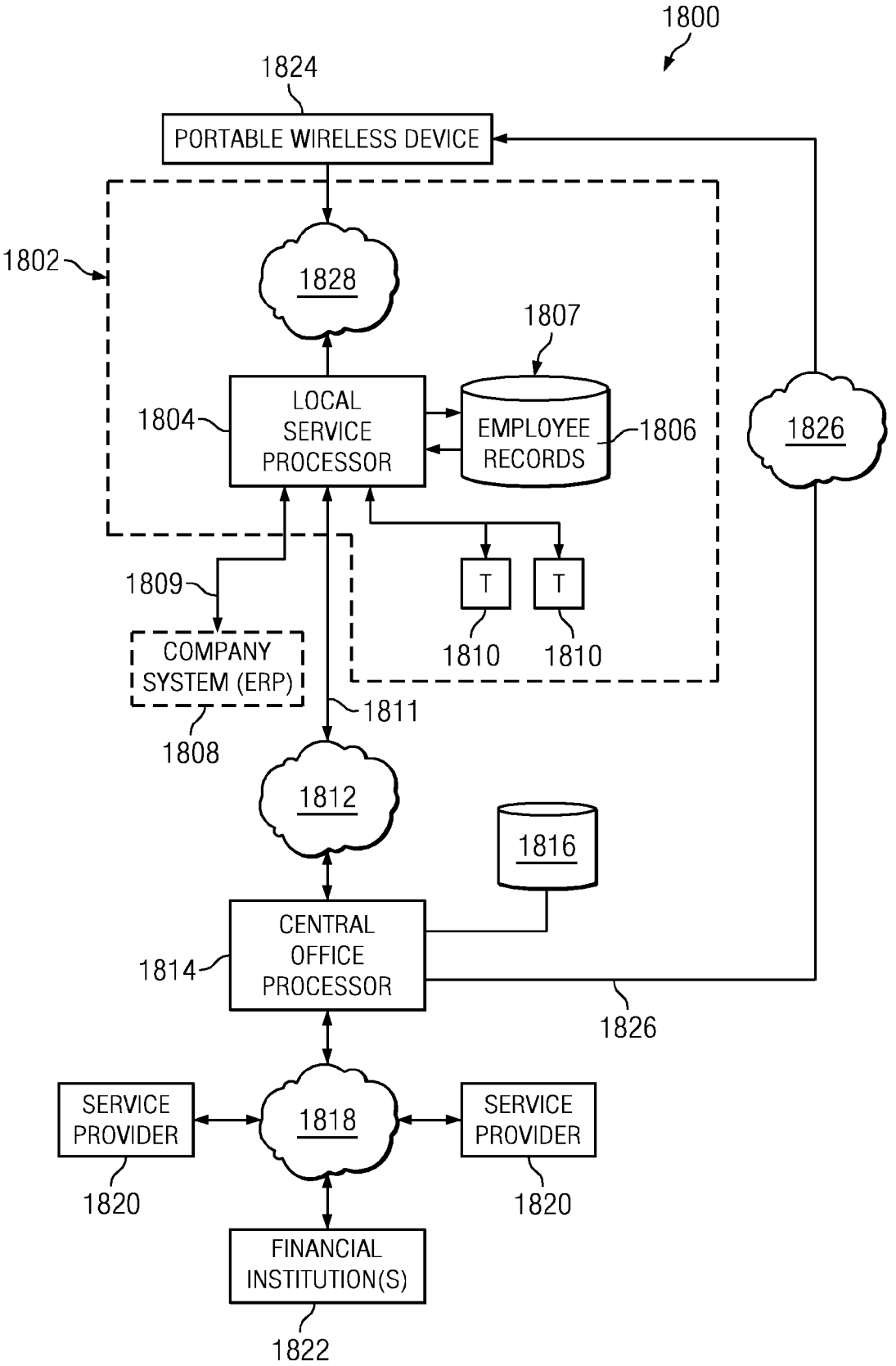
1800
1824
PORTABLE WIRELESS DEVICE
1802
1828
1807
1804
LOCAL SERVICE PROCESSOR
EMPLOYEE RECORDS
1806
1826
1809
T
T
1810
1810
COMPANY SYSTEM (ERP)
1811
1808
1812
1816
CENTRAL OFFICE PROCESSOR
1814
1826
SERVICE PROVIDER
1818
SERVICE PROVIDER
1820
1820
FINANCIAL INSTITUTION(S)
1822

FIG. 18

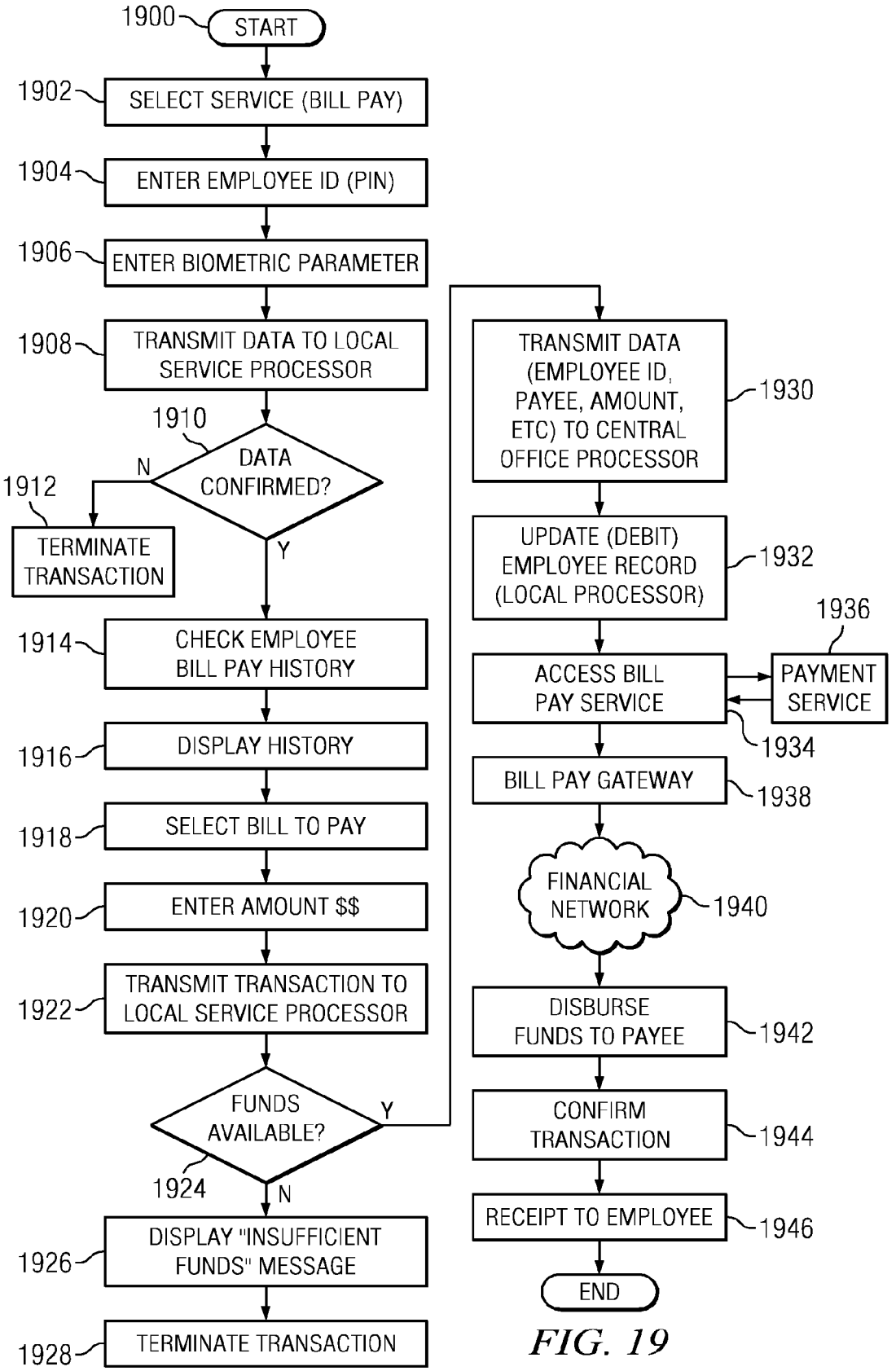
1900
START
1902
SELECT SERVICE (BILL PAY)
1904
ENTER EMPLOYEE ID (PIN)
1906
ENTER BIOMETRIC PARAMETER
1908
TRANSMIT DATA TO LOCAL SERVICE PROCESSOR
1910
DATA CONFIRMED?
N
1912
TERMINATE TRANSACTION
Y
1914
CHECK EMPLOYEE BILL PAY HISTORY
1916
DISPLAY HISTORY
1918
SELECT BILL TO PAY
1920
ENTER AMOUNT $$
1922
TRANSMIT TRANSACTION TO LOCAL SERVICE PROCESSOR
FUNDS AVAILABLE?
Y
1924
N
1926
DISPLAY "INSUFFICIENT FUNDS" MESSAGE
1928
TERMINATE TRANSACTION
TRANSMIT DATA (EMPLOYEE ID, PAYEE, AMOUNT, ETC) TO CENTRAL OFFICE PROCESSOR
1930
UPDATE (DEBIT) EMPLOYEE RECORD (LOCAL PROCESSOR)
1932
1936
ACCESS BILL PAY SERVICE
PAYMENT SERVICE
1934
BILL PAY GATEWAY
1938
FINANCIAL NETWORK
1940
DISBURSE FUNDS TO PAYEE
1942
CONFIRM TRANSACTION
1944
RECEIPT TO EMPLOYEE
1946
END

FIG. 19

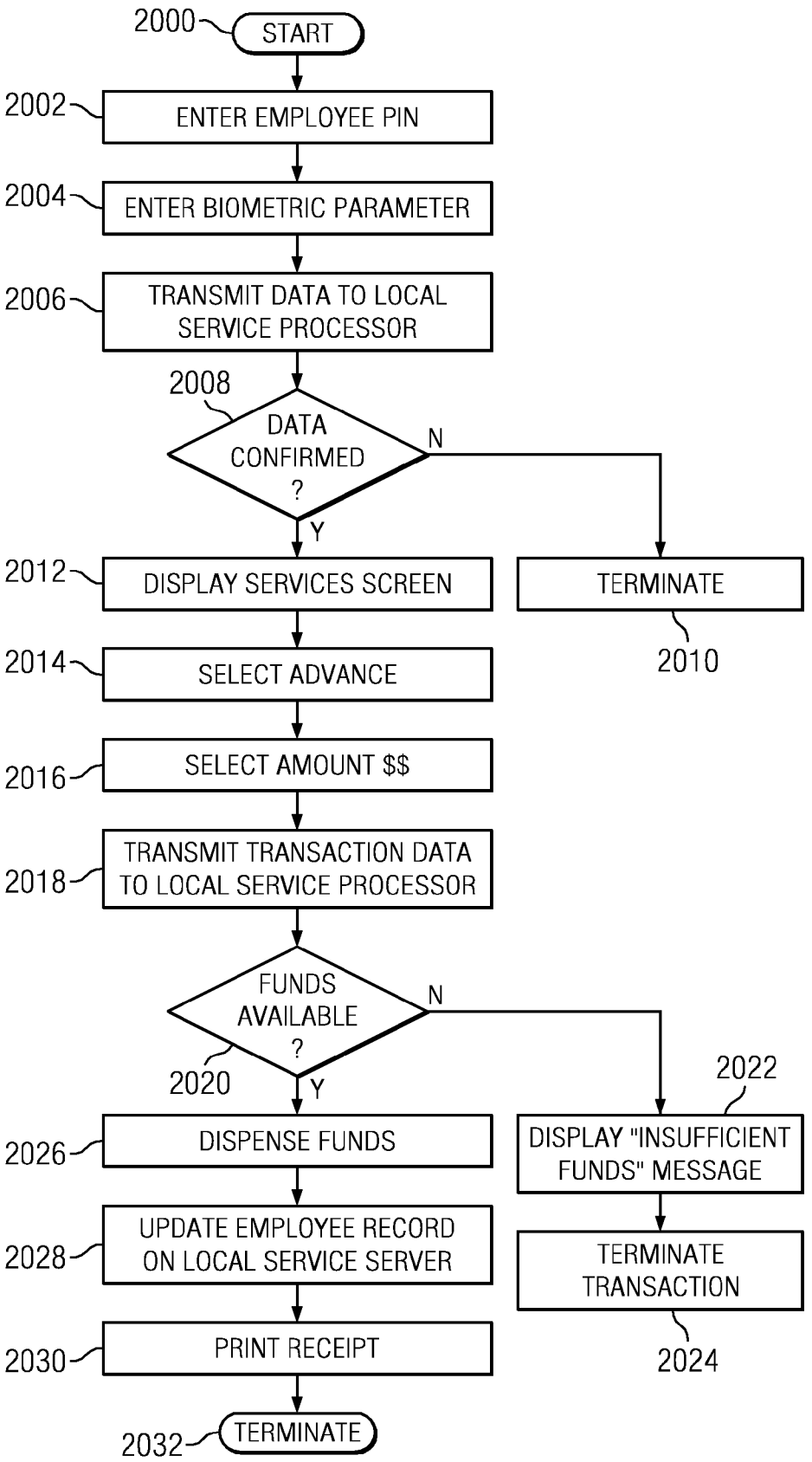
2000
START
2002
ENTER EMPLOYEE PIN
2004
ENTER BIOMETRIC PARAMETER
2006
TRANSMIT DATA TO LOCAL SERVICE PROCESSOR
2008
DATA CONFIRMED ?
N
Y
2012
DISPLAY SERVICES SCREEN
TERMINATE
2010
2014
SELECT ADVANCE
2016
SELECT AMOUNT $$
2018
TRANSMIT TRANSACTION DATA TO LOCAL SERVICE PROCESSOR
FUNDS AVAILABLE ?
N
2020
Y
2022
2026
DISPENSE FUNDS
DISPLAY "INSUFFICIENT FUNDS" MESSAGE
2028
UPDATE EMPLOYEE RECORD ON LOCAL SERVICE SERVER
TERMINATE TRANSACTION
2024
2030
PRINT RECEIPT
2032
TERMINATE

FIG. 20

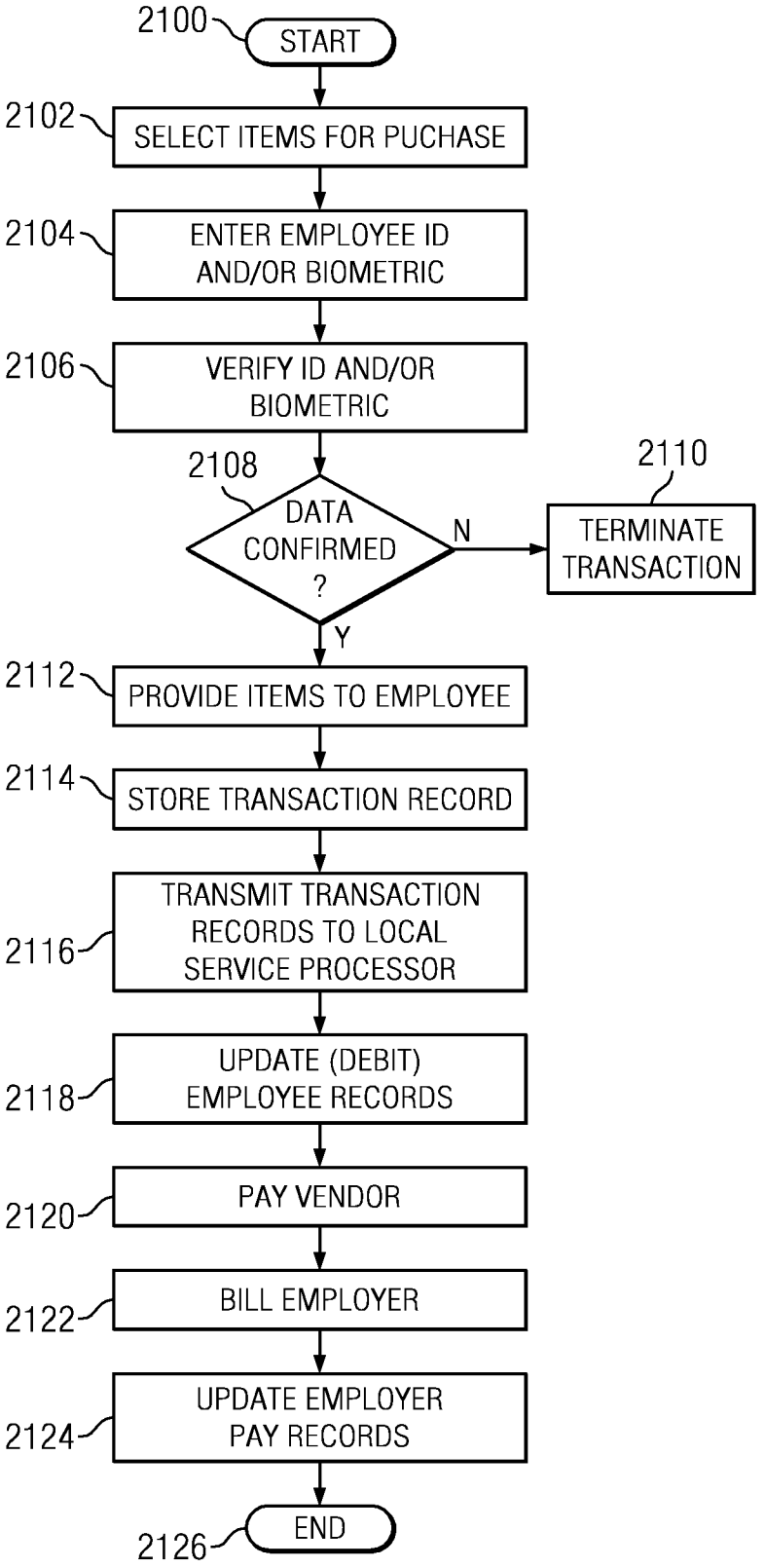
2100
START
2102
SELECT ITEMS FOR PUCHASE
2104
ENTER EMPLOYEE ID AND/OR BIOMETRIC
2106
VERIFY ID AND/OR BIOMETRIC
2108
DATA CONFIRMED ?
N
2110
TERMINATE TRANSACTION
Y
2112
PROVIDE ITEMS TO EMPLOYEE
2114
STORE TRANSACTION RECORD
2116
TRANSMIT TRANSACTION RECORDS TO LOCAL SERVICE PROCESSOR
2118
UPDATE (DEBIT) EMPLOYEE RECORDS
2120
PAY VENDOR
2122
BILL EMPLOYER
2124
UPDATE EMPLOYER PAY RECORDS
2126
END

FIG. 21

SYSTEM FOR PROVIDING TRANSACTION SERVICES TO A PLURALITY OF USER DEVICES

CROSS-REFERENCE TO RELATED APPLICATIONS

This application claims the benefit of U.S. Provisional Application Ser. No. 61/143,480, filed on 9 Jan. 9, 2009, and entitled "DISTRIBUTED TRANSACTION SYSTEM."

This application also claims the benefit of U.S. Provisional Application Ser. No. 61/265,028, filed on 30 Nov. 2009, and entitled "DISTRIBUTED TRANSACTION SYSTEM."

This application is related to U.S. application Ser. No. 12/684,927, filed on even date herewith, and entitled DISTRIBUTED TRANSACTION SYSTEM, the specification of which is incorporated herein by reference.

This application is related to U.S. application Ser. No. 12/684,928, filed on even date herewith, and entitled REMOTELY CONFIGURABLE USER DEVICE FOR ACCESSING A DISTRIBUTED TRANSACTION SYSTEM, the specification of which is incorporated herein by reference.

This application is related to U.S. application Ser. No. 12/684,929, filed on even date herewith, and entitled REMOTELY CONFIGURABLE USER DEVICE WITH PHYSICAL USER RESOURCES AND INTERFACE, the specification of which is incorporated herein by reference.

This application is related to U.S. application Ser. No. 12/684,931, filed on even date herewith, and entitled SYSTEM FOR PROVIDING EMPLOYEES ACCESS TO ACCRUED BUT UNPAID EARNINGS, the specification of which is incorporated herein by reference.

This application is related to U.S. application Ser. No. 12/684,932, filed on even date herewith, and entitled SYSTEM FOR PROVIDING GOODS AND SERVICES BASED ON ACCRUED BUT UNPAID EARNINGS, the specification of which is incorporated herein by reference.

TECHNICAL FIELD

The following disclosure relates to a system and method of distributed transaction services deployed on a plurality of terminals wherein the terminals may be dynamically reconfigured to provide different services.

BACKGROUND

The availability of self-service financial technology and devices such as automated teller machines, (ATMs), online banking and bill payment has grown rapidly in the recent past. However, the devices and systems used to conduct such financial transactions have typically been limited to a single service or services in a single financial arena. For example, conventional ATM machines are typically limited to cash withdrawals, deposits and balance inquiries. Self-service ticket machines are typically limited to dispensing tickets and require the use of a credit or debit card to complete a purchase. Current devices and systems also do not provide convenient, comprehensive financial services to unbanked and underbanked customers who may not have a bank account or a debit or credit card account. Some, however, do allow for multiple services from a common location, but each service has a dedicated VPN connection to the service provider.

Current ATM networks and similar services use standardized machines and processes that provide one or more services in the same manner regardless of where the machines are placed, who uses the machines, the frequency of transactions and other factors. However, an increasing number of different services are available, some of which may be more desirable to different segments of a population depending upon demographics, income levels, location and other factors. Thus, there exists a need for a system and method that can provide different services at different locations and times based upon predetermined factors.

SUMMARY

A system for providing access to a plurality of services from service providers to users at remote locations includes a plurality of resource managers, each disposed at a given one of the remote locations, each of the resource managers interfacing with a user through one or more physical resources to provide access to a to a user selected one of the services. A central processing center communicates with the resource managers and with service providers and operates in conjunction with the resource managers to execute a predetermined sequence of actions for accessing a desired one of the services from the service providers providing such service. In one aspect, a plurality of resource managers request desired ones of the services and manage one or more physical resources required for execution of a portion of the predetermined sequence of actions required for the requested service to interface with a user. The central processing center may execute the remaining portion of the predetermined sequence of actions required for the requested service to interface with a user.

BRIEF DESCRIPTION OF THE DRAWINGS

For a more complete understanding, reference is now made to the following description taken in conjunction with the accompanying Drawings in which:

FIG. **1** is a block diagram of a distributed transaction system in one embodiment according to the disclosure;

FIG. **2**A is diagrammatic illustration of a terminal for use in the system of FIG. **1**;

FIG. **2**B is a block diagram illustrating one possible configuration for the terminal of FIG. **2**A:

FIG. **2**C is a block diagram illustrating the manner in which different terminals may be configured in one embodiment according to the disclosure;

FIG. **2**D is a schematic representation of a mobile terminal for use in the system of FIG. **1**;

FIG. **2**E illustrates a diagrammatic view of the terminal;

FIG. **3** is a block diagram illustrating the management of terminals to provide services to users;

FIG. **4**A is a block diagram illustrating a possible user session with the system of FIG. **1**;

FIG. **4**B is a an exemplary screen display of a virtual ticker or receipt;

FIG. **4**C is an exemplary screen display for selecting a method of disbursing funds;

FIG. **5** illustrates a flowchart of one method of authentication used in a system according to the disclosure;

FIG. **6** is a flowchart illustrating a process of providing a user with a service employing a system according to the disclosure;

FIG. **7** is a flowchart illustrating an ATM transaction according to the disclosure;

FIGS. **7**A and **7**B illustrate a diagrammatic views of a transaction process between the service provider, central office processor and terminal;

FIG. **8** is a flowchart illustrating a process of dynamically reconfiguring the services provided by the system of FIG. **1** at a selected terminal;

FIG. **8**A illustrates a diagrammatic view of the interface between service modules and external resources;

FIG. **9** is a flowchart illustrating a method of dynamically reconfiguring a service provided by the system of FIG. **1** on a terminal based on the frequency at which a selected service is used on the terminal;

FIG. **10** is a flowchart illustrating a process for displaying branding materials;

FIG. **11** is a flowchart illustrating a method of selecting promotional material to be displayed based on transaction size and/or type;

FIG. **12** is a flowchart illustrating a method for configuring a terminal in the system of FIG. **1** based on a user profile;

FIG. **13** is a diagrammatic block diagram illustrating the configuration of one system according to the disclosure;

FIG. **14** is a flowchart illustrating a first possible transaction performed using the systems of the disclosure;

FIG. **15** is a flowchart illustrating a second possible transaction performed using the systems of the disclosure;

FIG. **16** is a flowchart illustrating a third possible transaction performed using the systems of the disclosure;

FIG. **17** is a diagrammatic block diagram illustrating one configuration of a data collection and storage system for use with systems of the disclosure;

FIG. **18** is a diagrammatic block diagram illustrating the configuration of another system according to the disclosure;

FIG. **18**A illustrates a diagrammatic view of a remote terminal utilizing a PDA;

FIG. **19** is a flowchart illustrating a first transaction performed using the system of FIG. **18**;

FIG. **20** is a flowchart illustrating a second transaction performed using the system of FIG. **18**; and

FIG. **21** is a flowchart illustrating a third transaction performed using the system of FIG. **18**.

DETAILED DESCRIPTION

Referring now to the drawings, wherein like reference numbers are used herein to designate like elements throughout, the various views and embodiments of a distributed transaction system are illustrated and described, and other possible embodiments are described. The figures are not necessarily drawn to scale, and in some instances the drawings have been exaggerated and/or simplified in places for illustrative purposes only. One of ordinary skill in the art will appreciate the many possible applications and variations based on the following examples of possible embodiments.

FIG. **1** is a block diagram of a distributed transaction system **100** also known as a Public Transaction System (PTS), e-Transaction System and/or an e-Public Transaction System. In one embodiment, system **100** includes a plurality of user terminals or kiosks **110**. As set forth in greater detail herein, each of terminals **110** is dynamically configurable to provide different services at different locations and times depending upon a variety of factors. Thus, each of the terminals **110** may have a different "character" depending on the service modules (or external resources) available at the terminal **110**. Terminals **110** are linked to a central office processor **114** via a data transmission interface represented by arrow **117** through a private or public network **118** such as the internet. In different variations, terminals **110** may be linked to the central office processor **114** by means of a local area network, a GSM connection or by means of the public telephone system (POTS). Central office processor **114** also interfaces with service providers **112** via network **118** which may be utilized to access and/or obtain service modules corresponding to the services offered by the different service providers.

Central office processor **114** may also interface with a variety of financial institutions **116**, such as banks, credit card companies and other financial service providers. A data storage device **120** associated with central office processor **114** may include information regarding the configuration, (i.e. the identity of and the services enabled on different terminals **110**) along with the information required to interface with service providers **112** and financial institutions **116**. A user data base stored on storage device **120** may include user profiles with such information as age, gender, biometric parameter data such as a palm vein scan or fingerprint scan, the user's service history and other information. Additional data such as transaction data, logs, analysis data and results and performance data may also be stored on storage device **120**.

As will be described more fully herein below, the system is a dynamic system which requires a strong interaction between each of the terminals **110** and the central office processor **114** in order to facilitate a transaction between a user and a service provider at one of the nodes **112**. Each of the terminals **110** is configured as an independent interface to a particular user utilizing that particular terminal **110**. Each of the terminals **110**, as will be more fully described herein below, has associated therewith service modules or external resources that will allow the user to effectively interface with the service provider **112** to both input information to the system for use in the transaction and to receive an output from the transaction, if such is appropriate, this being a transaction dependent operation. During the transaction, there will be many interactions between the terminal **110** and the central office processor **114**, this interaction allowing less of the transaction to be implemented on the terminal **110** and more to be implemented on the central office processor **114**, such that more control is provided by the central office processor **114**. Thus, it is not necessary to maintain any kind of database of profile information, for example, at terminal **110** but, rather, this can be maintained at the central office processor **114** such that global use thereof is provided to the different terminals **110** and, further, a higher level of security can be provided. As such, the terminal **110** could be considered to be somewhat of a "thin client" in that it merely needs to monitor its resources and provide control thereof and then interface with the central office processor **114** to implement and complete the transaction with the desired service provider **112**. This will be described in more detail below.

Referring to FIGS. **2**A and **2**B, each of terminals **110** is provided with a number of user interface devices (physical system or external resources) mounted in a housing **201** to allow a user to interface with the terminal **110**. In one variation, the devices include a keyboard **202**, a magnetic card scanner **204**, an ID scanner **206**, a smart card scanner **208** and a touch screen **210**. Other user interface devices include a proximity sensor **212**, a motion detector **214**, a check scanner **216**, a currency reader **218**, a voice recognition model **220** and a video camera **222**. Terminal **110** may also include a biometric parameter interface device such as a palm vein scanner **224** for authentication purposes. Each of the user interface devices may be connected to a CPU **244** (terminal processing unit) in terminal **110**. Each of the interface devices may be interfaced with CPU **244** via a physical system resource interface **203** including hardware and software enabling the physical system resource to communicate with CPU **244**.

Each of terminals **110** may also include a variety of output interface devices (also external resources) that enable the terminal to provide services to users. Such output devices may include a currency dispenser **226**, a magnetic card dispenser **228**, a smart card dispenser **230**, ticket printers **232** and a receipt printer **234**. In one embodiment, terminal **110** may also include a document printer **236**, a media display device **238**, a money order dispenser **240** and an audio output device such as a speaker **242**. Referring specifically to FIG. **2**A, in one variation, the media display device **238** may comprise a large, flat screen monitor for displaying promotional information such as advertisements for different goods and services. As illustrated, each of terminals **110** also includes a data storage device **246** (data store) associated with CPU **244**. In one embodiment, CPU **244** interfaces with central office processor **114** via a public or private network **118** (communications resource).

Referring still to FIGS. **2**A and **2**B, in one embodiment each of devices **202-242** are independently controlled. Thus, if one of devices **202-242** fails, for example, if check scanner **216** jams, the individual device or module may be disabled along with the services that it supports without affecting the remaining modules and services. An operating system runs on CPU **244** (processing platform), which, among other function, monitors the status of available physical system or external resources via the physical system resources interfaces **203**. In this manner, terminal **110** functions as a resources manager for managing available physical system or external resources. For example, if ticket printer **232** fails mechanically, the ticket printing services provided by terminal **110** may be disabled while the remaining services provided by the terminal are still available to users. In one embodiment, each of terminals **110** transmits a message to central office processor **114** at predetermined intervals with the status of each of devices **202-242**. In the event that a service becomes unavailable due to a hardware failure or similar problem, the particular service may be "grayed out" on screen **210**.

FIG. **2**C is a block diagram illustrating the manner in which different terminals **110** may be configured in system **100**. Service providers **112** may provide a wide range of different services. Each of the service providers **112** may have configuration information associated with the provider and/or with a service of the provider. The configuration information (configuration) may include information defining the provider **112**, and/or a service that the provider provides. The configuration may also include a "script," e.g., an instruction set defining a set of predetermined actions that are to be completed in a defined sequence to enable access to the service provider and/or service of the service provider. A configuration for a service provider **112** and/or for a service may be downloaded from the service provider to the central office processor **114** and, in turn, downloaded in whole or in part to selected ones of terminals **110** to enable a user to access the service provider of a provider service. The instructions incorporated in the script may be executed by the terminal **110** in conjunction with central office processor **114** to enable a user to access a user-selected service. A given configuration may identify the physical resources required to access a provider **112** and/or service. In many cases multiple configurations or scripts may require the same physical system resources for execution of an instruction set or script. In some embodiments, the operating system may disable access to a provider **112** or service if a required physical system resource is unavailable.

Referring still to FIG. **2**C, company A may provide service s**1**, company B may provide services s**2** and s**3** and company C may provide service s**4**. Such services may include providing tickets for different entertainment events, currency transfers and dispensing a variety of stored value cards such as debit cards, gift cards and telephone cards. However, some services may be more desirable to different population segments at different times due to factors such as demographics, cultural factors, income levels, holidays and the location of a specific terminal **110**. Consequently, it may be desirable to configure different terminals **110** to provide different services at different locations or to configure a terminal based on a user profile. For example, as illustrated, terminal **110**A may be configured with service modules to provide service s**1** and s**4** from companies A and C, respectively. Terminal **110**B may be configured with service modules to provide services s**2** and s**4** from companies B and C. Terminal **110**C may be configured with service modules to provide services s**1**, s**3** and s**4** from companies A, B and C, respectively.

As set forth in greater detail below, the configuration of services enabled on different terminals **110** in system **100** may be dynamically changed based on a number of factors such as service usage, transaction size or other factors. In one embodiment, terminals **110** are configured to transmit a "heartbeat" signal at predetermined intervals to central office processor **114** which may identify the service modules resident on the terminal and the status of hardware devices installed on the terminal. This is a "push" operation on the part of the terminal **110**. In other embodiments, a "pull" type operation may be used at selected intervals. Upon receipt of the "heartbeat" signal, central office processor **114** may transmit additional service modules to terminal **110**, enable or disable service modules resident on the terminal and/or associated hardware for implementing one or more of the service modules on the terminal.

With respect to the "heartbeat," this is a push operation wherein a given terminal **110** based on a predetermined interval will send out a communication to the central office. As noted herein above, the terminal **110** may be placed at any location in a city where sophisticated communication links are available or in a remote location where the sophistication of the communication links is questionable. Thus, a communication link to the central office processor **114** could be made through the Internet, a TC/IP connection/communication protocol, or a dial-up modem could be utilized, which would be a much slower data link. Once the data link has been defined, i.e., this being a hardware configuration that interfaces with a communication resource on the terminal **110**, a session can begin. This session is begun by a request sent out by the terminal **110** to the central office processor **114** requesting a communication session. Once an acknowledgement is received from the central office processor **114**, then data is transmitted to provide status information. Again, this status information indicates to the central office processor **114** the status of the particular configuration information that exists at the particular terminal **110** and the status of the various physical system or external resources. For example, if a printer had failed and this printer were required for a particular service, an indication would be provided that the printer had failed and that this service was no longer available. Of course, each of the terminals **110** has some type of ID associated therewith such that the central office processor **114** will recognize the terminal **110** as an authorized node on the network and would, of course, have information stored in a database local to the central office processor **114** that already has information regarding the configuration therefor. Thus, all that is really necessary is to provide status information of all of the resources or to provide just information as to what resource has failed. With this information, the central office processor **114** can then dispatch a service technician.

It should be understood that any type of communication protocol could be utilized in order to effect a communication between the two nodes. The type of communication can be any type of communication, i.e., status information, update information, etc. In the disclosed embodiment, the push operation is provided to transmit a minimal amount of information to the central office processor **114**, as there may be many thousands of terminal units **110** associated with a network. Thus, the minimal amount of information may just be status information. Once a connection has been made through the heartbeat and a session started, it may be that the central office processor **114** can then download additional configuration information to reconfigure the terminal **110**, if necessary. As one example, consider a situation where one of the services provided by a terminal processor is an ATM function. In this ATM function, one of the external resources that is associated with providing the service is a display. This display will display the owner of the ATM. This particular external resource is controlled by configuration information for the particular services, as will be described hereinbelow. If the ownership of the ATM service has changed, it might be that the owner of the service would want all of the terminal units that had the ATM function associated with this particular service provider changed to reflect the new owner in the "splash" page. This would require a modification of the configuration "script" that is associated with providing the service and it would then require the central office processor **114** to download to each of the terminal units **110** this information. This could be facilitated every time the "heartbeat" function is asserted by a particular terminal unit **110**. Once the session is open, the session could remain opened and the configuration information in the form of the new ownership information downloaded. Since the heartbeat function occurs at regular intervals, the entire network of ATM units associated with the particular service provider could be updated in a very short period of time with a minimal amount of information being transmitted over the network.

FIG. **2**D is a schematic representation of a mobile terminal **250** that may be used to access central office processor **114** to provide services to customers. Mobile terminal **250** may be a tablet-sized device including a processor **262** and an associated data storage device **264**. Mobile terminal **250** may be configured with a touch screen display **252**, a keyboard **253**, a printer **254**, and a card reader **256**. Mobile terminal **250** also includes a wireless data transmission interface **258** that provides a data transmission link via a public or private wireless network **260** with central office processor **114** (FIG. **1**). Mobile terminal **250** may be dynamically configured with different service modules from central office processor **114** in order to provide different services based on factors such as service usage, transaction size or other factors as described below.

Mobile terminal **250** is particularly suited for use in locations where the location of a fixed location terminal **110** is impractical; for example, in rural areas where the majority of potential users or customers are unbanked for reasons such as lack of access to financial institutions, distrust in financial institutions, lack of communications infrastructure or other reasons. In this embodiment, a designated operator of mobile terminal **250** may accept currency from a customer and use the mobile terminal to pay the customer's bills, transfer funds, print receipts, coupons, money orders, tickets or similar documents. The designated operator of mobile terminal **250** may also use the terminal to receive a funds transfer on behalf of the customer. In this embodiment, the operator may disburse cash or currency to the customer upon confirmation of a funds transfer to a designated account on behalf of the customer.

Conventionally, the mobile terminal **250** could be a PDA (Personal Digital Assistant). Typically, these PDAs provide a processing function associated therewith, in addition to a phone function that can run various applications. One of these applications could be a local terminal application that allows the local terminal **250** to communicate with the central office processor **114**. As noted hereinabove, there are a number of methods for communicating with the central office processor **114**. One can be to use the data link associated with the internal phone modem, i.e., that associated with utilizing the data services of a particular PDA **250**. However, most of the PDAs or local terminals **250** will have associated therewith an **802.11** communication link that uses a wireless access protocol (WAP) that can interface with a local wireless hub that is connected to a network such as the Internet through TCP/IP protocol. This would allow the local terminal **250** to access other units such as the central office processor **114**. It should be understand that this could be an intermediate control processor that could be accessed by the local terminal **250**. Further, it could be that the local terminal **250** is merely an extension of one of the terminals **110**, such that the local terminal **250** actually constitutes an external resource of the terminal **110**.

Another application that could be implemented on a mobile terminal, requiring only a display, is that associated with a money transfer operation either from the individual utilizing the mobile terminal **250** to obtain some value in the form of cash or to transfer this to someone else. To facilitate such a transaction, the mobile terminal **250** will be utilized to identify the user, i.e., to provide some type of identification in the form of a user ID PIN number. Further, some type of biometric input, such as the biometric input **257**, could be utilized to provide a fingerprint input for a user. Thus, the mobile terminal **250** could be utilized to authenticate a particular user. Once authenticated while running the application, the application would then, for example, allow access to a financial institution to "withdraw" cash. This withdrawal would be in the form of a provided code. This code would be provided to the user on the display **252**, which could then be utilized to complete a transaction. This transaction that could be completed would be to go to a terminal **110** having a cash dispenser or some other cash dispenser that would recognize this code to dispense cash to that individual. Further, this code could be a code that could be transmitted to a relative in a remote location to use another terminal to obtain the cash in either U.S. currency or in any foreign currency. By utilizing the local terminal **250**, all of the functionality of the terminal **110** or a portion of that functionality could be implemented in the mobile terminal **250**.

Referring now to FIG. **2**E, there is illustrated a more detailed diagram of the terminal **110** and the manner by which it interfaces with the various physical system or external resources. There is illustrated the processor **244**, which is operable to interface with a plurality of external resources **270**, which, as described hereinabove, can be any type of hardware resource that allows a user to interface with the various service providers through the central office. In general, the terminal **110** does not possess the capability to allow a user to interface with any kind of service to conduct a financial transaction without being connected to the central office. This is not to say that such could not be implemented. However, for example, if a user were provided a code that could be input to a terminal **110** through the keypad (one of the external resources **270**), this would allow the user to

retrieve cash from a cash dispenser (another one of the external resources **270**). However, if the terminal **110** did not interface with the central office or the service provider through the central office processor **114**, then that would require the terminal **110** to have associated therewith all of the information necessary to authorize a particular user on that terminal **110** in addition to preprocessed information about an already in process financial transaction. This would mean that all of the terminals **110** would be required to have all of that information. This is not practical for most financial transactions. These are not pay-as-you go type terminals that would allow a user to input value and receive value therefrom with a percentage of the input value retained as a fee and maintained in the system independent of the operation of any external processing system.

The processor **244** has associated therewith a light operating system that provides the basic operating parameters to interface with the central office, interface with the storage database **246** containing the various service modules, and also interface with the physical system or external resources **270**. In order to interface with the external resources **270**, there is provided a hardware interface **272** associated with each external resource **270**. This external resource basically is a physical terminal or connector that can receive a connection or cable from the external resource **270** and this will typically allow bi-directional communication. Data can be transmitted to the external resource **270** for a printer, for example, and information can received back from that printer indicating an error. Therefore, there will always be some type of monitor function associated with a particular external resource **270** in addition to a data transfer path. The data transfer path is illustration by a path **274** and the monitoring information is represented by a path **276**. Any type of well-known connection can be used to provide this. In recent years, most external resources in the form of printers, keyboards, and the such, utilized a conventional communication link such as a serial USB connection. These USB interfaces utilize a common driver interface such that plugging the USB cord from the external resource **270** into the hardware interface will allow the processor **244** to recognize the device and essentially identify that device. Further, after the hardware interface has been provided, there will then be some type of driver software that will be required for the processor **244** to effect an interface with the external resource **270**. Even though the hardware interface may be a USB interface or some proprietary interface, there still must be some type of driver software to allow communication with the external resource. For example, a printer may be recognized as a particular printer through a USB interface or other type of serial or parallel port interface, but driver software is required in order to utilize the full functionality of that particular external printer or other external resource. If the external resource **270** were a display, then a particular cable or interface such as a VGA cable would be required to interface with the display. Appropriate drivers would be required for the display. Sometimes, the operating system itself has predefined drivers for displays, as these are somewhat universal. For some resources, however, special drivers would be required to utilize the full functionality of that particular resource.

The processor **244** then manages the resources **270** by keeping a table of available resources. If a resource fails, this will be communicated through the hardware interface to the processor **244** and may, in fact, require the use of the driver software to interface with the external resource **270** to provide this monitoring function. If the resource fails or if it is not connected, this would be recognized by the processor **244**. For example, when a particular configuration is provided, it may require a cash dispenser, a keyboard input and a display output in addition to a biometric scanner. The particular software script that comprises part of the service module will require all of these resources in order to function. Therefore, there will be a list of available resources that must exist in order for a particular terminal **110** to constitute a fully operating terminal for that service in accordance with the configuration information provide by the central office processor **114**. If one of these resources disappears, this will disable a particular service module and this will be communicated back to the central office processor **114** during the "heartbeat."

The storage region **246** will be the area where the various service modules "script" is stored. This is the sequence of instructions that must be carried out in order to effect the portion of the transactions that is associated with a particular terminal **110**. For example, one of the first transactions that will occur and that constitutes a service module is an authorization module. This authorization module will require authentication of an individual by requiring them to enter certain information, such as name, password, PIN information, and even biometric data. This will be utilized to authenticate the individual at the central office processor **114**, after which the user will then be presented a display of the available services that can be used or, more likely, the services will first be provided in a "greyed-out" format to the user and these then, upon authentication, will be un-greyed-out so that the user knows they now have access, i.e., they have been authenticated. After that, the user then can select one of the service modules and, upon selection thereof, the service module will sequentially access the various external resources to effect the transaction in conjunction with the central office processor **114**, as will be disclosed hereinbelow. Thus, each of the service modules s**1**, s**2**, s**3** . . . sn will be stored therein, which each constitute a portion of the script or transaction process required to be executed by the terminal **110** for a particular service. This is the configuration information that is downloaded from the central office processor **114**. However, it should also be understood that a particular terminal **110** could have all of the service modules fully loaded therein and all that the central office processor **114** would be required to do would be to activate a particular service on a terminal **110**.

Two of the resource interfaces **272** are illustrated as being associated with communication external resources, one being an external resource **280** labeled COM1 and a second one **282** labeled COM2. Each of these are interfaced with separate networks **284** and **286**, respectively. For example, one communication protocol could be a dial-up modem and the other could be an Ethernet card. Either of these can interface a separate and different network utilizing a separate and different protocol. Both, alternatively, could be the same hardware resource for a redundancy purposes. This resource allows the processor **244** to communicate with the central office processor **114**.

FIG. **3** is a block diagram illustrating the management of terminals **110**, **250** to provide services to users. A session manager module **300** resident on terminal **110** manages service modules **302**. Each of service modules **302** is associated with a service such as cash withdrawal or advance, check cashing, providing tickets or another service. A customer or user interface **304** associated with each of service modules **302** enables a user to enter or input the information required to utilize the desired service. Each of service modules **302** also has an associated hardware interface **306** that allows the service module to communicate with the devices necessary to collect information and provide the desired service. Such devices may include biometric parameter scanners, key-

boards, touch screen GUIs, printers for printing receipts, coupons and tickets, card dispensers, currency acceptors, currency dispensers and similar devices. Service module **302** may also include a central office interface **308** enabling the service module to communicate with the central office processor **114**.

FIG. **4**A is a block diagram illustrating a possible user session. If a selected service requires user identification and/or authentication, as hereinafter described, an identity session **410** is opened by session manager module **300**. Next, a transaction session **408** may be opened in which one or more services **400-406** may be used in a transaction. The transaction session **408** typically begins with the user providing or receiving value in connection with a service **400**. In different variations, the value may be in the form of currency, a credit or debit card transaction, a check or money order. For example, service **400** may include the receipt of value in the form of currency entered by a user of terminal **110**. Service **402** may comprise, for example, a bill payment service by which the user pays his or her telephone bill with the value entered at **400**. Transaction session **408** ends when no value remains or when any remaining value is returned to the user. For some transactions, for example, a cash withdrawal where the user simply swipes a card and enters a PIN, authentication may not be required and an identity session **410** will not be created. During a given transaction session, session manager **300** tracks value received and dispensed by means of terminal **110**.

Turning to FIG. **4**B, in one embodiment terminal **110** displays the current session value as transactions are conducted using the terminal. In one variation, the transactions and session value may be displayed using touch screen **210** of FIG. **2**A. In other embodiments, a separate dedicated graphical user interface may be employed to display transactions and the session value. As value is added or removed during the session, a screen display **412** consisting of a virtual ticker or receipt may be displayed including the transactions and current session value. For example, in the illustrated example, a user begins a session with a check deposit ($300.00). The user then pays a bill such as a telephone or other utility bill ($55.00). The user may also transfer funds ($100.00), leaving the user with a session value or balance ($145.00). The user may then terminate the session and receive the remaining session value by pressing an icon or "button" **414** included in the screen display. After a user presses button **414**, a screen display **416** (FIG. **4**C) may be presented to the user prompting the user to select the form in which the remaining session value is to dispensed, i.e. cash, a credit to a debit card, a money order or a transfer of the remaining session value to an account of the user at a financial institution. The user may then select the manner in which he or she wishes to receive the remaining session value after which the session is terminated.

FIG. **5** is a flowchart of one method of authentication used in system **100**. The process begins at step **500**, which may include sensing the presence of a user at terminal **110** by means of a motion detector, proximity sensor or similar device. At step **502**, terminal **110** detects a card swipe. The card may be a credit card, a stored value card such as a debit card or an identity card. The card is read at step **504** and the user is prompted to enter a personal identification number (PIN) at step **506**. If a PIN is not entered at step **508**, the process returns to Start. If a PIN is entered, the user is prompted to enter a biometric parameter at step **510**. The biometric parameter may be a palm vein scan, a fingerprint scan, a retinal scan or other unique biometric parameter associated with the user.

If a biometric parameter input is not detected, at step **512** the process returns to Start. If a biometric parameter input is entered, the collected data including information entered at the card swipe, the PIN number and the biometric parameter are transmitted to the central office processor **114** at step **514**. At step **516**, central processor **114** uses the user's PIN to retrieve a biometric parameter associated with the user's PIN from a user database on data storage device **120** (FIG. **1**). In some variations, the user database may be resident on terminal **110** or the biometric parameter may be obtained from a service provider or financial institution. At step **518**, the biometric parameter transmitted from terminal **110** is compared to the stored biometric parameter. If the transmitted biometric parameter does not match the stored biometric parameter an error message is transmitted to terminal **110** at step **520** and an error message is displayed at step **522** on the terminal. If the transmitted and stored biometric parameters match, central office processor **114** transmits an authentication message to terminal **110** and the authentication process is completed (step **524**).

It will be appreciated that for some transactions, a card swipe may not be necessary. In those instances, a combination of a PIN number and a biometric parameter may be sufficient to identify and authenticate a user of terminal **110**. It will also be appreciated that the combination of a PIN number with a biometric parameter enables central office processor **114** to compare a transmitted biometric parameter to a stored biometric parameter without searching an entire database of such parameters. In the case of some transactions, the combination of a card swipe with the input of a valid PIN may be sufficient to enable a user to access a selected service. In yet other embodiments, a biometric parameter may be stored on a user ID card. In this case, the parameter may be retrieved during or after a card swipe and compared to a corresponding parameter obtained from the user at the time of the transaction.

It will be appreciated that the terminal **110** is designed to be a "thin client," which will result in a minimal amount of information being stored at the terminal **110**. This may be for the purpose of security such that no confidential information is stored thereat in the form of biometric or profile information of subscriber/users or other confidential information. Further, since there will be a plurality of terminals **110** for a given central office processor **114**, is undesirable to store user information at a particular terminal **110**. However, it is possible that certain users may frequently use a particular terminal **110**. In this event, there may be a most recently used database contained thereat, which allows the biometric information to remain stored in a local database for a short period of time. If it is not reused within a short period of time, it is deleted and, if it is used within that short period of time, it will be "strengthened" or refreshed in the database such that it will remain in the database for a longer period of time. This facilitates the speed of authentication.

FIG. **6** is a flowchart illustrating a process of providing a user with a service employing a system according to the disclosure. The process begins at step **600**, and at step **602** the presence of a user at terminal **110** is detected. In some embodiments, the step of detecting the presence of an individual at the terminal may be omitted. At step **604**, terminal **110** receives an input. The input may be a card swipe, a biometric parameter or a user entry made via a keyboard or touch screen. If the presence of a user is not detected at step **602**, or if no input is received at step **604**, the process returns to the starting point. Based on the input received at step **604**, a determination is made at step **606** as to whether the user needs to be identified and/or authenticated. If identification or

authentication is required for the transaction, the user is identified or authenticated at step **608** as previously described.

At step **610**, the user selects the desired service. In some cases, it may not be necessary to identify or authenticate the user. For example, if the user is purchasing a ticket or money order with currency, identification and/or authentication for the transaction may not be required. At step **612**, the service is processed and value is exchanged. The exchanged value may be in the form of a debit or credit to a credit card or other stored value card or the user may receive or input currency into terminal **110** by means of a currency dispenser or reader. As an example, any type of exchange with a credit card that does not require identification, consider the use of a credit card where the credit card company merely requires a scan of the credit card and does not require the user to input any kind of PIN or code from the back of the card. Credit card companies have realized that the ease of using a credit card without requiring a signature or any type of user input information significantly simplifies the process resulting in more income to the credit card company. The credit card companies have determined that the risk for small transactions, such as buying a ticket, entail little or not risk to the credit card company of not collecting that money. Thus, just swiping a credit card with no authentication whatsoever can be an aspect of the financial transaction and can constitute an authentication.

At step **614**, a determination is made as to whether the service has been completed. If the service has been completed, the user's balance is checked to determine whether he or she has any value remaining in the transaction. As previously noted, session manger module **300** of FIG. **3** tracks the user's balance during the transaction. For example, if the user entered a $20 bill into terminal **110** to pay a $17 outstanding balance on a telephone bill, the user would still have a balance of $3 of value remaining If the user has no value remaining, the process ends. If the user still has value remaining, he or she is prompted to determine whether an additional service is desired at step **618**. If an additional service is desired, the process returns to step **606**. If another service is not desired, the terminal **110** dispenses value in an amount equal to any remaining balance at step **622** and the process ends at step **624**.

FIG. **7** is a flowchart illustrating an ATM transaction using terminal **110**. The process may begin at step **700** where the presence of a user may be detected by means of a motion sensor or proximity sensor or similar device. At step **702**, a card swipe is detected. The card may be a credit card, debit card or other stored value card. If a card swipe is not detected, an error determination is made at step **704**. If a process error is detected, for example, if the card reader is not operable, a process error message may be sent to central office processor **114** at step **706** and the transaction is terminated. At step **708**, the user is prompted to enter a PIN number. If a PIN number is not detected, an error check is made at step **710**. If a process error is detected, an error message to central office processor **114** may be sent at step **706**. If a PIN number is received, the user is prompted to enter an amount at step **712**. Again, if an amount is not entered, an error check is made at step **714** and if a process error is detected, the process loops back to step **706** where a process error message is transmitted to the central office processor **114**.

At step **716**, the collected data is validated. The validation process will include transmission of the collected information to central office processor **114**, which will in turn validate the transaction with the user's selected financial institution. In some instances, a user biometric parameter may also be required to validate the user. If the information or data cannot be validated, an error check is made at step **718** and if a process error is detected, the process loops back to step **706** where an error message is generated. In one embodiment, if a process error is detected at any one of the preceding steps, the service software module and the associated user interfaces and/or hardware may be taken out of service by the central office processor **114** and/or by the session manager model **300** of FIG. **3**.

Assuming that the transaction is validated at step **716**, value, for example currency, is dispensed to the user at step **720**. In other embodiments, a stored value card may be dispensed or the balance associated with the card increased. The user is then prompted to determine whether an additional service is desired at step **722**. If an additional service is desired, the process loops back to step **608** of FIG. **6**. If not, the transaction is completed at step **726**.

Referring now to FIG. **7**A, there is illustrated a diagrammatic process of the overall transaction that is effected between a service provider, the central office processor **114**, the terminal **110** and a user. This has been described hereinabove. As noted hereinabove also, the transaction is dispersed between the terminal, the central office and the service provider, i.e., certain steps of the transaction must be carried out at each location. The transaction is initiated in one embodiment by determining that a user is present at a particular terminal **110**. This is illustrated by an arrow **728** indicating that the user is present. This can be a motion detector or a touch screen display that indicates to the user to touch the screen in order to initiate some type of transaction or terminal access. The terminal **110** will recognize this and then somehow change the terminal display for output of information to the user. The user is typically then required to input some type of ID or biometric information such as a palm vein scan, as indicated by an arrow **730**. At this point, the terminal **110** has information associated with the user and, since this is all associated with the authentication procedure, a session will be opened and authentication of the user will be effected. This will be a set of instructions that is carried out on the terminal **110** that will require information to be sent to the central office processor **114**, as indicated by an arrow **732**. This is typically some type of request. At the central office processor **114**, a sequence of instructions will be carried out wherein the authentication information received from the terminal **110** will be carried out to access information in the database to determine if the user is an authenticated user. This initiates a single session for this particular user and that particular terminal **110** at the central office processor **114**. It should be understood that multiple processes could be carried on at the same time for different terminals **110** and it is only necessary for each process or session carried out at the central office processor **114** to be maintained thereat. Once the process has been carried out, as indicated by a plurality of process arrows **734**, an authorization will be provided as indicated by an arrow **736** to the terminal **110**. The terminal **110** then utilizes this authorization and determines what the next step is, as indicated by a plurality of arrows **738**. Once the authorization has been received and the next step initiated, the next step will be to display available services to the user and indicate to the user that they have been authenticated, as indicated by an arrow **740**. This is the end of the authentication process. Typically, a user will be authenticated on the entire system. Therefore, if the system is configured to provide an ATM function, a bill paying function, a ticket printing function, etc., all of these functions could be made available to the user merely upon the authentication of the user at the terminal **110**. However, it could be that a particular user is only authorized for certain services and only those services would be provided to the user although other services are available at the terminal

110. In any event, the user will then be provided the ability to select a service, which is indicated by a selection arrow **742**. The terminal **110** will determine which service module to initiate and, upon initiation, it will carry out the necessary instructions to generate a request packet to the central office processor **114**, as indicated by an arrow **744**. It may be that the terminal **110** collects information such as a value of money to be transferred, a value of money to disbursed through an ATM, etc. This information is collected by the terminal **110** and then transferred to the central office processor **114**. The central office processor **114**, once receiving this information, then processes the information to determine which module at the central office processor **114** is required. For example, if it were an ATM, based upon the particular user and their authentication, multiple service providers could be selected for this particular ATM transaction, although a single financial institution would typically be utilized. Thereafter, the central office processor **114** will transfer information to the service provider as indicated by an arrow **746** to transmit an initial request, followed by processing at the service provider and information transferred back to the central office processor **114**, as indicated by an arrow **748**. There are indicated a number of different instructions or sequences that must be carried out at each of the service provider, the central office processor **114** and the terminal **110**. They are indicated additional transactions between the terminal and central office processor **114**, as indicated by arrows **750**, and additional requests and return of information from the service provider to the central office processor **114**, as indicate by a sequence of arrows **752**, and then an additional transaction at the end of some sequence of transaction comprised of the arrows **744-752**, as indicated by an arrow **756** indicating that information now needs to be displayed to the user. This may be in the form of a balance in an ATM or some other information that is required from the service provider in order to go forward with the transaction. Once this is provided to the user, there may an additional input, as indicated by an arrow **760** that was preceded by a display arrow **762**, wherein an input of information is provided to the terminal **110** and then the terminal **110** will execute the sequence to determine what to do with this input, and this example financial transaction indicates that information will be transmitted to the central office processor **114** by an arrow **763** followed by a sequence of transactions between the central office processor **114** and service provider indicated by arrows **764**, followed by a final completion of transaction arrow **766** from central office processor **114** to terminal **110**, wherein value will be transferred to the user as indicated by an arrow **768**. This diagrammatic view indicates a general sequence of instructions that may be associated with any transaction. This is not to be interpreted by way of limitation as there are many different requests back and forth between the terminal **110** and central office processor **114** and the service provider that need to be facilitated in order to effect an entire financial transaction. Also, at the end of particular financial transaction, another financial transaction could be selected.

Referring now to FIG. **7**B, there is illustrated a second diagrammatic view of the unique manner by which an overall transaction sequence **770** is illustrated. This transaction sequence is the entire sequence of instructions in the system that must be effected from the time the user selects a service to the time that value is transferred or a denial of the service is provided. This sequence is an "interleaved" sequence in that certain steps are carried out by the terminal **110**, certain steps are carried by the central office processor **114** and certain steps are carried out by the service provider. It can be seen that the first steps will be carried out by the terminal **110** followed by steps at the central office processor **114** and certain steps at the service provider and so on. It is also noted that the terminal **110** need only have a certain portion of instructions or sequence disposed thereat. These instructions or sequences can be reduced to a minimal amount, depending upon the design thereof. For example, if it is desirable to have all of the authentication data disposed at the central office processor **114**, all instructions and sequences necessary to authenticate a user can be carried out at the central office processor **114**. Thus, to configure a particular terminal **110**, all that is required is to download the sequences necessary for carrying out a particular transaction in a particular service module. Thus, a large portion of the sequence can be disposed at the central office processor **114**. The configuration information that is associated with a particular service can be referred to as "scripts," which comprise a definition of a particular sequence of actions or transactions or instructions that need to be carried out at the terminal **110** in order to effect a communication with the central office processor **114** such that the central office processor **114** can then select a particular service provider to complete the transaction and carry out the necessary instructions to interact between the service provider and the terminal **110**.

FIG. **8** is a flowchart illustrating a process of dynamically reconfiguring the services available on a terminal **110**. In some embodiments, a service provider or the operator of system **100** may wish to provide one or more services at those terminals **110** only when certain criteria are met. In this embodiment, a service s**1** is provided at terminal **110** only if the cumulative value of a selected type of transaction, for example cash withdrawals, exceeds a predetermined amount. The process begins at step **800** where a transaction is initiated by a user. At step **802**, the transaction is identified. If the transaction is a cash withdrawal, in which case terminal **110** may be functioning as an ATM, the value of the transaction is stored at step **804** and a counter is incremented at step **806**. At step **808**, the counter is checked to determine whether a predetermined number n of cash transactions have been processed with terminal **110** within a predetermined time frame. If the number of cash transactions is less than n, the process loops back to the start.

If n cash transactions have been processed with terminal **110**, the average amount of the transactions is determined at step **812** and compared to a predetermined value, for example $300. If the average value of the cash transactions is equal to or exceeds the predetermined value, the process loops back to the start. If the average value of the cash transactions is less than the predetermined amount, service s**1** may be disabled on terminal **110**. User interface devices and/or hardware devices associated with service s**1** may also be disabled, or disabled in connection with the service. For example, if the service involves providing event tickets, the ticket printer may be disabled. At step **816**, a determination is made as to whether another service should be added or substituted for service s**1**. If so, a new service s**2** may be enabled on terminal **110** at step **818** by central office processor **114**. Enabling new service s**2** may also require enabling user interfaces and/or hardware associated with the service. Services that are deleted or inoperable due to hardware problems may be "grayed out" or deleted from display **210**.

It will be appreciated that other criteria may be used for dynamically configuring the package of services provided on a selected terminal **110**. Such criteria may include the aggregate number or amount of transactions conducted with terminal **110**, when the transactions are conducted, the number or amount of transactions conducted using a particular service and other factors. It will also be appreciated that user interface

devices and/or other hardware devices may be enabled or disabled on terminal **110** as a result of reconfiguring the terminal as described above. The decision to reconfigure the services and/or or hardware of a selected terminal may be determined by pre-programmed logic resident on central office processor **114** or on terminal **110**.

Referring now to FIG. **8**A, there is illustrated a diagrammatic view of how resources can be shared between different service modules. There are illustrated two service modules **830** and **832**. These can be very similar modules or significantly different. Each of the service modules **830**, **832**, when implemented, will require certain external resources in order to provide the service. Initially, a determination will be made as to whether the external resources are "enabled" or available. The initial configuration will enable the various resources, but if one of the resources fails then the monitoring function of the central processor unit will determine such is the case and the service module that requires such resource will then be disabled and an indication provided in the "heartbeat" back to the central office processor **114** that such is the case. However, when all of the resources that are required by a particular service module are available, each of the service modules, such as service modules **830** and **832**, will be associated with their associated external resources. In the embodiment of FIG. **8**A, there are illustrated five external resources **836** labeled A, B, C, D, and E. Each of these external resources has a hardware interface **838** associated therewith. The hardware interface, as described hereinabove with respect to FIG. **2**E, is operable to provide a physical hardware "plug" that will interface with the particular external resource in addition to some type of software driver that will allow the central processor effectively communicate with the external resource to make use of the external resource for input/output and also to monitor that external resource.

In FIG. **8**A, service module **830** requires the use of external resource A, external resource B and external resource E. Service module **832** requires the use of external resource B, external resource C, external resource D and external resource E. Therefore, external resource B and external resource E are shared between the two service modules. This can be a situation where, for example, the keyboard is required in order to carry out the particular transaction associated with a particular service module, or a printer is required for both, whereas possibly one service module requires a cash dispensing system and the other does not if it were associated with, for example, a bill paying transaction. Each of the service modules **830** and **832** will interface with a communication resource module **840** through an associated hardware interface **838**. This communication and resource module **840** will communicate with the central office processor **114**, which will then in turn communicate with the service providers and wherein there are two service providers **842** and **844** illustrated. Thus, a single "pipe" is provided the terminal **110** to communicate between selected services modules **830** or **832** and a particular service provider **842** or **844**. Thus, it can be seen that sharing the resources for the provision of different services and allowing the resources to be remotely enabled/disabled provides a significant amount of flexibility to providing services to a user at a particular location associated with terminal **110**.

FIG. **9** is a flowchart illustrating a method of reconfiguring a terminal **110** based on the frequency at which a selected service is accessed by users within a given time frame. The process starts at step **900** where a customer initiates or completes a transaction. At step **902**, a determination is made as to whether the transaction involved a particular service s**1**. If not, the process loops back to Start. If the transaction involves service s**1**, a counter is incremented at step **904**. At step **906**, a date check is made. If the date is less than a predetermined value x, corresponding to the selected time frame, the process loops back to Start. If the date is greater than x, the total number of transactions involving service s**1** within the time frame is determined at step **908** and compared to a predetermined value n. If the number of transactions is equal to or greater than n, the process loops back to Start and the date is initialized or reinitialized at step **910**. The new date will be based on a predetermined value, for example the date could be initialized so that periods of days, months or longer may be evaluated.

If the number of transactions involving service s**1** is less than the predetermined value n, the service may be disabled on the terminal at step **912**. The step of disabling the service may include disabling associated devices. For example, if the service is check cashing, a check reader may be disabled at terminal **110**. Other user interface devices and hardware associated with different services will remain enabled.

At step **914**, a determination is made as to whether to substitute a new service, s**2**, for the disabled service s**1**. If so, the new service is enabled on the terminal at step **916** and the process ended. If no new service was selected, the process loops back to the start. In this manner, terminal **110** may be configured and reconfigured based upon the number of transactions conducted with a selected service and/or a selected service provider.

In some embodiments involving transactions using a branded service, it may be desirable to display logos, trademarks, promotional material or other material regarding the service provider. For example, if a user is conducting a bank transaction with terminal **110**, it may be desirable to display a touch screen having an appearance that simulates the appearance of that bank's ATMs and/or logos or trademarks of the service provider. Thus, for example, if a user is a customer of ABC bank and is withdrawing cash, a screen may be displayed to the user that simulates the screen used by ABC bank for its transactions.

FIG. **10** is a flowchart of a process for displaying such branding materials. The process begins at step **1000** where a user initiates a transaction. At steps **1002** and **1004**, a card swipe is detected and the user is authenticated as previously described. At step **1006** a determination is made as to whether the selected service is provided by a branded service provider. If not, the process loops to step **1012** where the service is processed as previously described. If the service is provided by a branded service provider, the branding is retrieved at step **1008**. The branding may include logos, trademarks, promotional materials or other information in a screen display presented to the user at step **1010** after which the service is processed at step **1012**.

In certain situations, a particular company may desire to brand a plurality of the terminals **110** for a feature such as, for example, the ATM service. Thus, whenever the "splash" page is presented to a user, it is branded with the particular company. This branding is part of the stored script at the terminal **110**. In the event that ownership changes or a particular company is acquired or they change their name, all that is required to change the branding of a particular service or a particular terminal is to update that particular script at each of the terminals. This may involve just updating a few lines of code or just downloading an entirely new service module for the presentation aspect. This is easily facilitated in a number of ways. One method would be to download the particular information in response to receiving a "heartbeat" from each of the terminals, or alternatively, accessing each terminal by polling the terminal or initiating an access thereto.

As previously described and illustrated in FIG. **2**A, terminal **110** may include a media display such as a flat screen monitor. In some instances, it may be desirable to select the promotional material displayed on such media display device based on the particular transaction initiated by the user or the amount of the transaction or even the profile information of the user. Promotional material may be selected to correspond to selected dates or holidays, or be based on the aggregate amount, number or type of transactions processed on the particular terminal.

FIG. **11** is a flowchart illustrating a method of selecting promotional material to be displayed at terminal **110** based on transaction size and/or type. The process begins at step **1100** where a user initiates a transaction. In the illustrated embodiment, the transaction is a cash withdrawal from an ATM machine; however, other transactions may be used in the method. At step **1102**, a determination is made as to whether the selected transaction is a cash withdrawal. If not, a set of standard promotional material and/or displays are presented on the media display **238** of FIG. **2**A at step **1104**. At step **1106**, the amount of the cash withdrawal is compared to a first predetermined value, for example $300. If the transaction is for $300 or more, tier 1 promotions are displayed on the media display device at step **1108**. Tier 1 promotions may be advertising for higher priced goods and services than those advertised in the standard display.

If the transaction amount is less than the first predetermined value, the amount is compared to a second predetermined value, for example $100 at step **1110**. If the transaction amount is greater than or equal to $100, then second tier promotional material is presented on the media display device at step **1112**. Tier 2 promotional device may be advertising for goods and services less expensive than those promoted in tier 1 promotions but more expensive than the goods and services promoted in the standard promotional display. If the transaction amount is less than the second predetermined value, the process loops back to Start and standard promotional materials are displayed on the media display device.

As will be appreciated from the foregoing, promotional materials displayed on the media display device of terminal **110** may be selected based on a wide variety of factors. Such factors may include the type of service selected, the transaction amount, and the size or type of transaction. For example, promotional materials displayed on the media display device of terminal **110** may be based on the average or aggregate transaction amount over a predetermined time period such as a day, week or month. The promotional material displayed on the media display device may be selected based on the number of times or the number of transactions involving a particular type or types of services provided.

FIG. **12** is a flowchart of a method of configuring a terminal **110** based on a user profile. The process begins at step **1200** where a user initiates a transaction. At steps **1202** and **1204**, a card swipe is detected and the user is identified as authenticated as previously described. At step **1206**, the user's identity is compared to user profiles stored in a database either at terminal **110** or in a database at central office processor **114**. The user profile may include information such as a user's age, race, the size of transactions completed by the user using the system and other information. If a user profile is located, the profile is retrieved at step **1208** after which a number of different actions may be taken based upon the profile. For example, at step **1210** a screen display including those services that the user has utilized in the past may be displayed. At step **1212**, advertising or promotional material may be presented to the user on the media display device. The selection of promotional material may be based on the user's age, gender, the type of transactions the user has conducted utilizing system **100** in the past and other factors.

Other actions may be taken based on the user profile. For example, at step **1214** coupons for selected goods and services may be printed for the user based upon his or her profile. In other embodiments, if the user's profile indicates that the user has conducted transactions using a particular service not enabled on the particular terminal **110**, the service may be enabled on the terminal, along with associated interfaces and/or hardware by central office processor **114**. Alternatively, if for some reason the user profile indicates that the user is not approved to access a given service or conduct a particular type of transaction, the service and associated user interface devices may be disabled on the terminal. Thus, it will be appreciated that terminals **110** may be configured based upon the profile of the particular user conducting a particular transaction at that time. Note that "configured" as used in this context means enabling certain service modules and associated resources whereas the operation of downloading "configuration" information relates to downloading the necessary "scripts" for desired service modules.

FIG. **13** is a diagrammatic block diagram further illustrating the configuration of terminals **110** (FIG. **1**). As shown, each of terminals **110** is configured with a main service or service pack **1300**. Main service **1300** interfaces with a plurality of I/O devices installed on terminal **110**. A device package **1304** is provided for each device installed on terminal **110**. Device package **1304** includes the software and firmware necessary for the terminal **110** to interface with the particular device. As illustrated, a physical interface **1306** is provided for each device. As described hereinabove, the physical interface **1306** may be a USB connector or other hardwired connectors designed for the particular device. Devices **1302** (external resources)may include graphic user interfaces (GUIs), card swipe devices, keyboards and similar devices as illustrated in FIG. **2**B and **2**E.

Main service **1300** may interface with a plurality of different services **1310**. Services **1310** may include typical ATM transactions, ticket sales, bill paying services, card dispensing services and the like. Services **1310** will have associated service logic **1312**, a screen display **1314** and associated data **1316**. Services **1310** may interface with a transaction engine **1318**, a distribution module **1320** and/or a configuration/error management module **1322**. Depending upon the particular configuration of the terminal **110** and the desired service **1310**, the main service module **1300** may interact with a central office processor **1324** in order to enable a user to perform various transactions as described with respect to FIGS. **7**A and **7**B.

FIG. **14** is a flow chart illustrating one possible transaction performed using a terminal **110** (FIG. **1**). The process begins at step **1400** where the main service is implemented on terminal **110**. The main service **1300** may include or have access to different service modules **1402**. Modules **1402** may include ATM services, bill pay services, services for transferring funds, ticket purchase services and so forth. At step **1404**, terminal **110** displays the various available services at the particular terminal. In this example, a user selects ATM services at step **1406**. At step **1408**, a card swipe display screen is presented to the user to prompt the user to swipe his or her credit or debit card. At step **1412**, the ATM service module **1402** accesses card swipe logic and the card swipe device package interface **1414** to record the user's information from the card. Assuming that the card swipe is successful, at step **1416** an enter PIN screen is displayed to the user. Main service **1300** accesses PIN logic **1418** and a PIN device package interface **1420** to enable a user to enter a personal iden-

tification number. It will be appreciated that, in lieu of a personal identification number and/or in addition to a personal identification number, a biometric parameter, such as a palm vein scan or fingerprint scan may be required.

At step **1422**, an ATM menu is displayed to the user. As previously noted, the menu or the display may be branded with logos, trademarks or other indicia related to the user's financial institution. At step **1424**, the user selects a withdrawal and at step **1426** selects an amount to be withdrawn from his or her account. At step **1428**, withdrawal logic associated with the ATM service package is accessed by main service **1300** and a communications interface with central office processor **114** (FIG. **1**) is opened at step **1430**. At step **1432**, terminal **110** transmits the transaction information to a transaction front-end processor ("TFEP") at central office processor **114**. The communications with the transaction front-end processor will include the information from the user card, the user PIN number and/or any biometric parameter required to conduct the transaction. The transaction front-end processor in turn accesses an ATM withdrawal service at step **1434**. At step **1440**, a payment service module is accessed and the transaction information is provided to the module. The payment service module maintains records of money or value flowing in and out of the system, fees associated with the various transactions and billing information. Additionally, at step **1436**, a host security module (HSM) is accessed and at step **1438**, selected transaction information is encrypted for transmission.

At step **1442**, the transaction information is transmitted to an ISO (International Standards Organization **8583** standard) service, including an ISO Bridge **1444** to create a data connection or link to financial network **1446**. Financial network **1446** provides a data communication with banks **1448** or other financial institutions where a user may have an account or where the transaction may be processed.

It will be understood that the ATM transaction involves four steps. The first step is the withdrawal request transmitted as previously described. The second step is a response from the bank **1448** or other financial institution back through central office processor **114** to terminal **110**. Assuming that funds are available, the financial institution will authorize the transaction and funds are dispensed by the terminal in the third step of the transaction. The funds may be dispensed in the form of cash, a stored value card such as a debit card or a funds transfer to a user or other account. Finally, a response from the terminal **110** is transmitted through the system to the financial institution indicating the amount actually dispensed. For example, if the user requested a $100 cash withdrawal and only $60 was dispensed due to a machine failure, a lack of cash available at terminal **110** or another reason, that information would be transmitted back to bank **1448** to enable the bank or financial institution to credit the user for any funds not received.

FIG. **15** is a flow chart illustrating another possible transaction performed using a terminal **110** (FIG. **1**). The process begins at step **1500** where the main service or service pack **1502** is implemented on terminal **110**. The main service **1502** may access a variety of service modules **1503**. Modules **1503** may include ticket purchase services, bill pay services, services for transferring funds, ATM services, ticket purchase services and other services. At step **1504**, terminal **110** displays the various available services to the user of the terminal. In this example, a user selects bill pay services at **1508** and a card swipe display screen is presented to the user at step **1510** to prompt the user to swipe his or her credit or debit card. In other embodiments, the display may include an option enabling the user to transfer funds from an exiting account to pay one or more bills or enter currency to pay the bill.

In this example, the user elects to use a credit or debit card to pay a bill; for example a utility bill, a telephone bill or other payment. At step **1512**, the bill pay service module accesses card swipe logic (step **1512**) and the card swipe device package interface **1514** to record the user's information from the card. If the card swipe is accepted, at step **1516** a screen display prompting the user to enter his or her PIN number is presented. Main service **1502** accesses PIN logic at **1518** and a PIN device package interface **1520** to enable a user to enter a personal identification number. As previously noted, a biometric parameter such as a palm vein scan or fingerprint scan may be required in addition to, or instead of, a PIN.

The process continues at step **1522** where a bill pay menu is displayed to the user of terminal **110**. In one embodiment, the identity of prior payees, (e.g. utility company, phone company, finance company) may be retrieved from central office processor **114**, (FIG. **1**) and displayed such that the user may select (step **1524**) the entity to which he or she wishes to make a payment with a user interface such as a keyboard or GUI. In other embodiments, the user may enter the identity of the payee and associated information such as an account number. The user may then enter the payment amount at step **1526**.

Next, payment logic **1528** is accessed and a communications interface **1530** with central office processor **114** is opened. In one embodiment, payment logic **1528** is resident on terminal **110**. Payment logic **1528** assembles the necessary information to complete the transaction and a communications interface with the central office processor **114** is opened at step **1530** enabling terminal **110** to communicate with transaction front end processor **1532**. At step **1534**, a payment service module **1536** is accessed. As previously described, payment service module **1536** maintains records of money or value flowing in and out of the system, fees associated with the various transactions and billing information for use by central office processor **114**. In different variations, central office processor **114** may be configured with multiple transaction front end processors **1532** such that transactions are placed on a queue and processed with the first available front end processor.

A bill pay gateway or service is accessed at step **1538**, which in turn opens a data link with financial network **1540**. Financial network **1540** may provide access to the user's checking account **1542**, to a credit card account **1544** or a debit card account **1546** to enable the user to complete the bill pay transaction by transferring funds as presented by arrows **1548** to the selected payee **1550**. Confirmation of the payment may then be transmitted back through financial network **1540**, bill pay service **1534**, and front end processor **1532** to terminal **110** where a receipt may be printed or displayed to the user.

Turning now to FIG. **16**, in yet another embodiment, a terminal **110** may be used to schedule a service such as a dental appointment, an inoculation, a physical examination or other service. In this embodiment, the process begins at step **1600** when a user accesses main service **1602**, which may include service modules **1603** such as ATM services, bill pay services, funds transfer services, ticket purchase services, employer loan services and personal services. As previously noted, terminal **110** may be remotely configured from central office processor **114** to present these services to a user of the terminal based upon preselected criteria. In other embodiments, terminal **110** may be linked directly to one or more service providers via a network. The selected services may be

displayed or presented via a user interface (step **1604**) such as a graphical user interface ("GUI").

At step **1606**, a user may select a personal service menu, which is displayed at step **1608**. The user may then select the personal service that he or she wishes to obtain at step **1610** and schedule the service. At step **1612**, the user may be prompted to enter a PIN which is processed with PIN logic at **1614** and PIN device package interface **1616** to enable a user to enter a personal identification number. As previously noted, a biometric parameter such as a palm vein scan or fingerprint scan may be required in addition to, or instead of, a PIN to verify the user's identity. At step **1618**, the service selection and/or schedule is confirmed. In one embodiment, the user may elect to pay for the service as described in connection with FIG. **15**.

FIG. **17** is a block diagram illustrating a data collection system **1700** that may be utilized in one embodiment of the invention. A plurality of services **1702** (e.g., ATM, funds transfers, purchases, bill pay services etc.) are made available on terminals **110** (FIG. **1**). Selected data from transactions conducted using services **1702** is transmitted from terminal **110** to a shared memory server which may be located at central office processor **114** (FIG. **1**) or another location as represented by arrows **1703**. The data may be transmitted continuously on a real time basis as transactions are conducted or temporarily stored on terminal **110** and transmitted on a batch basis at predetermined intervals, for example every 12 or 24 hours. Shared memory server **1704** processes the data, which is stored on a system of records (SOR) database **1706**. SOR database **1706** provides a means of recalling data relating to transactions conducted using terminals **110** in an expedient manner.

In order to maintain a manageable amount of data on SOR database **1706**, data may be downloaded to a data warehouse **1708** at periodic intervals, for example weekly or monthly. In one embodiment, data warehouse **1708** is a very large storage device, capable of storing terabytes of information. In one embodiment, a data analysis engine **1710** may be utilized to analyze data stored on data warehouse **1708** to generate business intelligence **1712** such as the type and number of transactions conducted using terminals **110** and trends in the type and number of transactions. Business intelligence **1712** may be used to configure or re-configure terminals **110** with different services depending upon the demand for specific services. Business intelligence **1712** may also be used to select advertising presented on media display device **238** (FIG. **2**A).

FIG. **18** is a block diagram illustrating another system **1800** in accordance with the disclosure. In the embodiment illustrated in FIG. **18**, one or more terminals (employee access nodes) **1810** are located in a factory or similar facility **1802** where a significant number of employees, for example 50, 100, 200, 300 or more are employed. Employee access nodes **1810** are substantially similar to terminals **110** described in connection with FIG. **1** and may be configured with the same hardware and the same and additional functional features. In particular, terminals **1810** may be remotely and dynamically configured with different services as described in connection with terminals **110**. As illustrated, terminals **1810** are interfaced with a local service processor **1804**. A database **1806** associated with local service processor **1804** is maintained on a data storage device **1807** and contains selected information regarding employees as set forth in detail below. Specifically, data stored on database **1806** may include a record with employee earnings for a current pay period that have not been remitted to the employee. For example, if the pay period is two weeks, after which an employee is given a check for his or her earnings, and an employee has worked one week into the pay period, the record of the amount of earnings due to the employee for the week he or she has worked and not yet been paid (accrued earnings) may be recorded in database **1806**. In many instances, an employer may pay an employee on a delayed basis, for example the employee may be paid for pay accrued during a pay period, a week or other predetermined interval after the end of the pay period.

A distinction should be made for "users" to the system disclosed with respect to FIG. **18** and one for the system. In general, when a user walks up to any terminal, whether it be the terminals **1810** within a corporation associated with the local server processor **1804** or terminals **110** located anywhere outside of the facility **1802**, authentication is required of that user. Thus, a "user" can be a user for the entire system or a user only for the facility **1802**. Once a user enters profile information and biometric information such as information associated with a palm vein scanner or personal ID information, this will provide information that is useful to authenticate a user when they walk up to any terminal **110** or terminal **1810**. However, the user can have two different identities in the system. They can have an identity as an overall system user, i.e., a profile stored at the central office processor or they can have an identity for use only within the facility **1802**. It could be that there is a general profile associated with a user. In the concept of having a general user system ID, it could be that authentication of a user will require interface with the central office processor **1814** in FIG. **18** that provides an overall system ID for the user. Thus, there will be a profile associated with that user constituting, in part, biometric information for the user, that can be utilized to authenticate the user with their system ID. This system ID can then be utilized if the user ventures outside of the facility **1802** for the purpose of using their personal ATM information. Within the facility **1802**, as will be described hereinbelow, there will be information that is desirable to remain within the facility. For example, within the facility, it may be that the overall system user ID is stored in a relational database associated with an employee number and employee records. The associated profile information that is stored at the central office processor **1814** database **1816** could be duplicated at the local service processor **1804** in the database **1806**. Thus, the user could, at the terminal **1810**, enter their palm vein scan information to be authenticated, which could be completely authenticated by the local service processor using information in the database **1806**. The user could even utilize their employee number in the most simplified case, which would then be related to the overall system user ID for authentication purposes.

Referring still to FIG. **18**, a record of the employee's earning for the current pay period, or other predetermined period, may be obtained by means of an interface represented by arrow **1809** with the company's Enterprise Resource Planning Module (ERP) **1808** module or similar computerized payroll records maintained by the employer, owner and/or operator of facility **1802**. In the case of employee records that are updated on a daily basis, for example for employees that "clock" in or out according to their work schedule, an employee's pay records may be updated and transmitted to local service processor **1804** and stored in database **1806** on a daily basis. In other embodiments, database **1806** may be updated on a weekly basis or other predetermined time interval. In some embodiments, the employee's ability to access accrued and unpaid earning will be cut off or terminated at a predetermined date (trigger date) or time prior to the employer's regularly scheduled disbursement of earnings. For example, if the employer normally disburses pay checks or makes direct deposits of employee earnings for a given pay period on a Friday, the employee's ability to access received

and unpaid earnings for the pay period may be cut off or terminated on the Tuesday preceding the Friday when the employer makes normally scheduled disbursements. This allows time for the employer's pay records to be updated (debited) to account for transactions made by an employee using system **1800** before the employer disburses earnings for the period. This may be a pull or push operation with respect to the ERP.

Local service processor **1804** is provided with a data transmission interface represented by arrow **1811** with the central office processor **1814**. Data transmissions between the local service processor **1804** and central office processor **1814** may be made via a wired network such as a local area network (LAN), the internet, a wired telephone network (POTS) or via a wireless network. In other embodiments, a cellular network may be employed for transmissions between the local service processor **1804** and central office processor **1814**. Central office processor **1814** may include a database **1816** for storing employee records and transaction information and interfaces with service providers **1820** and financial institutions **1822** via a private or public network **1818** such as the internet to provide transactional services to employees of the owner/operator of facility **1802**.

It will also be appreciated that local service processor **1804**, database **1806** and terminals **1810** may be owned and/or operated by a third party. In one embodiment, the employee may be required to register (subscribe) with his or her employer and/or the owner and/or operator of system **1800** in order to utilize the system. In this embodiment, the employee may be assigned a unique personal identification number (PIN) and a biometric parameter such as a fingerprint or palm vein scan, which may be obtained and stored on database **1806** during the registration process. This may be a local PIN or ID or a system ID as described hereinabove.

FIG. **19** is a flow diagram illustrating a transaction that may be conducted with system **1800** using a subscribing employee's accrued earnings that have not been remitted to the employee. Referring to FIGS. **18** and **19** in conjunction, the process begins at step **1900** where an employee accesses a terminal **1810** and accesses a bill pay service at step **1902** by means of a user interface such as a touch screen, keyboard or similar device. The process continues at steps **1904** and **1906** where the employee enters his or her PIN and a biometric parameter such as a thumbprint, fingerprint or palm vein scan, which is obtained from the employee. In different embodiments, only a PIN or biometric parameter may be required to continue. The employee information (e.g. PIN and/or biometric parameter) is transmitted to local service processor **1804** at step **1908**. Local service processor **1804** accesses database **1806** at step **1910** to confirm the identity of the employee. If the employee's PIN and/or biometric parameter are not confirmed, the process is terminated at step **1912**. Assuming that the employee data is confirmed, local service processor **1804** may access the employee's bill pay history at **1914** and display the employee's balance of accrued and unpaid earnings along with a list of payees to the employee at step **1916**. The employee may then select a payee from the list displayed on terminal **1810** or enter a new payee at step **1918**. In one embodiment, the employee may be allowed to select the amount to be paid at step **1920**. In some variations, the employee may elect to receive funds directly in which case the employee access node may disburse value in the form of currency, a money order, a check, script, tickets or coupons to the employees. In this embodiment, a record of the transaction may be stored on local service processor **1804**.

In the authentication process, as described hereinabove, it is possible that the initial authentication wherein each user always has a system-wide ID, may be performed at the central office processor **1814** wherein all profile information is stored. This will provide a general authentication to the system and then this can be relayed back to the local service processor **1804** to determine if that user is also associated with the facility, i.e., they are authorized to utilize the terminal within the facility for the purpose of accessing accrued funds. In this manner, all of the local pay records, employee numbers, etc., that would be proprietary to a facility would be maintained within a "bounded" network.

Referring still to FIG. **19**, at step **1922** the transaction information, i.e. the payee and amount to be paid, is transmitted to local service processor **1804** and database **1806** is accessed to determine the employee's accrued, but unpaid earnings at step **1924**. If the accrued but unpaid earnings are insufficient to pay the bill, terminal local service processor **1804** responds to terminal **1810** with an "insufficient funds" or "transaction denied" message which may be displayed to the employee at step **1926** and the transaction is terminated at step **1928**. In different embodiments, a threshold limit on the amount of funds that the employee may access and utilize with system **1800** may be set. The threshold amount could be a percentage of accrued but unpaid earnings, for example 40% or 60% or could be a set amount of currency, for example $200.00.

At step **1930**, the transaction information (employee ID, payee, amount, etc.) is transmitted to central office processor **1814**, which records the transaction on database **1816**. The employee's records are updated on local service processor **1804** and database **1806** to reflect the transaction at step **1932**. Central office processor **1814** accesses a bill pay service at step **1934** which in turn accesses a payment service at step **1936** as previously described in connection with FIG. **15**. At step **1938**, the bill pay service accesses a bill pay gateway to connect with a public or private financial network at step **1940** after which the funds are electronically disbursed to the payee at step **1942**. The payee confirms the transaction at step **1944** and a message is transmitted through networks **1812** and **1818**, central office processor **1814** and local service processor **1804** to terminal **1810** where a receipt may be printed or displayed to the employee at step **1946**. In this operation, value is first determined as being available to an employee as "virtual funds" and then a desired amount "transferred" from the virtual funds for payment of the bill or for any other transaction.

Referring again to FIG. **18**, system **1800** including local service processor **1804**, database **1806**, terminals **1810** and central office processor **1814** may be owned and/or operated by a third party. In this embodiment, the third party may charge the employee a fee for providing bill pay or other services such as pay advances for accrued but unpaid earnings. The third party operator of system **1800** also aggregates the cost of services, for example bill pay services and advances to employees over a predetermined period and bills the owner and/or operator of facility **1802** for funds dispersed by or received by employees during the period. For example, if the owner/operator of facility **1802** distributes paychecks on alternate Fridays, the third party may bill the owner/operator of facility **1802** on the Wednesdays preceding the Friday on which the employer disburses paychecks to its employees. Accrued earning spent or received by employees may then be deducted from their paychecks for the pay period by the employer. The third party absorbs the risk of authentication errors or fraud and the costs for all financial advancements to a user/employee.

FIG. **20** is a flow diagram illustrating another transaction that may be conducted with system **1800** using an employee's

accrued earnings that have not been remitted to the employee. Referring to FIGS. **18** and **20** in conjunction, the process begins at step **2000** when an employee accesses terminal **1810**. At steps **2004** and **2006**, the employee enters his or her PIN number and/or a biometric parameter. The employee information is transmitted to local service processor **1804** which accesses database **1806** to confirm the employee's status (e.g. currently employed) and identity at step **2006**. If the employee's identity and/or status cannot be confirmed at step **2008**, the transaction is terminated at step **2010**.

Referring still to FIG. **20**, at step **2012** the employee may select a service, in this case an advance of funds **2014** based on earnings accrued, but not yet disbursed to the employee. Assuming that the employee's identity is confirmed, at step **2016** a display is presented to the employee whereby the employee may select an amount to be advanced. The screen may also include a fee associated with the advance to enable the employee to terminate the transaction if he or she does not wish to proceed. The transaction data is transmitted to local service processor **1804** at step **2018** and the employee's records are accessed on database **1806** at step **2020** to determine whether the employee has sufficient accrued earnings to allow for the selected advance amount. If the accrued but unpaid earnings are insufficient, e.g. less than the requested advance, or if the requested advance exceeds a predetermined threshold amount, for example 50% of the employee's accrued but unpaid earnings, local service processor **1804** responds to terminal **1810** with an "insufficient funds" or "transaction denied" message which may be displayed to the employee at step **2022** and the transaction terminated at step **2024**.

Assuming that the employee has sufficient accrued unpaid earnings, at step **2026**, the requested advance is dispensed to the employee. The advance may be dispensed in the form of currency, a money order, a check or a stored value card such as a debit card. The employee's records on database **1806** are then updated to reflect the advance at step **2028** along with a fee for the service. Terminal **1810** may then print or display a receipt for the transaction to the customer at step **2030**, after which the transaction is terminated at step **2032**. Advances to employees may then be aggregated at predetermined intervals on local service processor **1804** such that the employer may be billed for the advances, (and other charges incurred by employees) at predetermined intervals, typically before the end of the employer's normal pay period so that any advances or charges may be deducted from the employee's accrued earnings before the employee is paid at the end of the pay period, such that the advanced amount can be deducted from the employee's pay for that pay period.

Referring again to FIG. **18**, in one embodiment, a portable wireless point of sale device **1824** such as a tablet-type computer may interface with system **1800** to enable employees to purchase items from mobile vendors, for example from food service vendors that typically travel a predetermined route with a truck equipped with food service items with periodic stops along the route. In one embodiment, device **1824** is remotely and dynamically configurable from central office processor **1814** via a wireless interface **1826** to enable or disable services on the device. Device **1824** is configured to interface with local service processor **1804** via a wired or wireless data link **1828**. Device **1824** may include a touch screen GUI, a receipt printer, a card reader and similar hardware suitable for use for a portable point of sale device. In this embodiment, it is assumed that system **1800** is operated by a third party that may provide devices **1824** to vendors as well as operating and maintaining local service processor **1804** and database **1806**.

FIG. **21** is a flowchart illustrating a method using a wireless point of sale device with system **1800**. The process begins at step **2100** where a mobile vendor operating, for example, a food service catering vehicle, stops at a predetermined location along his or her route in or adjacent to facility **1802**. At step **2102**, an employee selects food items supplied by the vendor, for example a hamburger and a soft drink. At step **2104**, the employee enters a biometric parameter such as a thumb or finger print using device **1824** and/or a PIN number. In the case where only a PIN number is used, it may be entered by the vendor.

At step **2106**, device **1824** transmits the employee biometric parameter or PIN to local service processor **1804** to confirm the employee's identity at step **2108**. If the employee's identity is not confirmed, the transaction is terminated at step **2110**. Depending upon the number of employees serviced by the vendor and the data storage capacity of device **1824**, the employee PIN data or biometric parameter of the employee may be stored on the device. In some embodiments it may be desirable to check the employee's accrued earnings balance via wireless interface **1826** with local service processor **1804** depending upon the size of the transaction. In other embodiments, wherein the amount is less than a predetermined threshold, for example $5.00 or $10.00, it may be deemed unnecessary to check the employee's accrued earnings balance.

Referring still to FIG. **21**, the purchased items are provided to the employee at step **2112** and a record of the transaction is stored on device **1824**. After a predetermined period, for example 4, 8, 12, 24 hours, the aggregated transactions at step **2114** are transmitted to local service processor **1804** at step **2116**. (However, this could be a real-time process.) The employee's record of accrued earnings that have not been dispersed are updated at step **2118** on data base **1806**. At step **2120**, the operator of system **1800** pays the vendor for the items purchased by the employee. The operator of system **1800** then bills the employer for the items purchased by employees at step **2122** after which the employer updates employee pay records by debiting the employee's pay for the pay period with the purchases at step **2124** and the process ends at step **2126**.

Device **1824** may also be configured with different service modules to enable employees to conduct transactions other than the purchase of goods. For example, device **1824** may be configured with service modules to allow an employee to pay a utility telephone bill, make a funds deposit or transfer funds utilizing accrued unpaid earnings. Thus, an employee could purchase food items for lunch and then pay his or her telephone bill utilizing services loaded onto device **1824**. In these embodiments, the operator of system **1800** will typically charge the employee a nominal fee for providing the services. The fee will be added to an amount debited from the employee's accrued and unpaid earnings along with the cost of the goods or services. In other embodiments, the vendor or recipient of funds advanced against the employee's accrued but unpaid earnings may be charged a fee for the service.

Referring now to FIG. **18**A, there is illustrated a diagrammatic view of the system utilizing a PDA, which is a portable terminal in effect. The PDA (Portable Digital Assistant) is designated with a reference numeral **1878**. PDA **1878** is a typical stand-alone PDA or a PDA that functions as a telephone. These are sometimes referred to as "smart telephones." They have associated therewith a fairly sophisticated processor that can process various applications in addition to a modem for effecting a voice call. There are a number of different data communication links that can be provided with the PDA **1878**. One can be through the data

modem that allows access to the phone service provider, or a conventional 802.11 WAP connection could be provided. In the embodiment disclosed within the facility **1802**, the WAP connection would be preferred as this provides a connection to a hub **1876** disposed within the facility **1802**, which interfaces with an internal network **1880**. This internal network **1880** is interfaced with the local service processor **1804**. Therefore, through the WAP connection, the PDA **1878** can interface with the local service processor **1804**.

PDA **1878** is a device that basically parallels the operation of a terminal with the exception that there are a restricted number of resources. In this embodiment, the resources are a display **1882**, which is a touch screen display that can be manipulated with a pointing device **1883**, an optical scanner **1884**, a fingerprint scanner **1886** and a camera **1888**. As such, a user can access all functions associated with the terminal **1810** that require nothing more than a display, a biometric input and possibly an optical scanning input. Additionally, the camera **1888** could be utilized to provide a "face scan" if such were appropriate.

On the PDA **1878**, there will be stored various applications. These applications can be downloaded for various functions. One of the applications will be a "terminal" application that emulates one of the terminals **1810**. This operates substantially similar to that described hereinabove in that certain service modules, sessions modules/managers, etc., are downloaded to the PDA **1878**. When this application is operating on the PDA **1878**, the PDA **1878** will be able to provide a heartbeat to the local service processor **1804** to define the availability thereof for updates and the such. Typically, the PDA **1878** will have a fixed configuration that will be associated with the model, etc. Upon initial set-up, the application is loaded and the then the model number of the PDA **1878** is entered to define the overall external resource configuration associated therewith. Thereafter, biometric information can be input to the system in addition to some ID information. This ID information could actually be associated with the download such that that every download has a unique ID associated therewith. Thus, when PDA **1878** collects all of the user information, it can then transmit this to the local service processor **1804** (and subsequently to the central office processor **1814**, if appropriate) and then periodically contact the local service processor **1804** or central office processor **1814** for updates.

When a session is initiated, the user could access a service module, such as bill pay, and complete a transaction utilizing the display **1882**. Another type of transaction utilizing the display could be to transfer money from accrued and unpaid funds to an acquaintance or family member in a different country. In this type of transaction, money would be transferred from the employee's account to a remote location by accessing the funds and then providing a "code" for the transfer. This code would be displayed to the user at the completion of the transaction. Typically, these funds would be transmitted to a company such as Western Union® or some such facility and they would be available for any one that presents the code to a Western Union® office. The code would be displayed on the display at the end of the transaction and then the user can contact a recipient by making a phone call or even emailing such a code to the recipient. In fact, part of the financial transaction could be the emailing operation.

In another transaction, the system may be set up such that a menu item in the company cafeteria could be selected and paid for by the user by first using the optical scanner **1884** to scan some menu to select the items they want to pay for and then completing the transaction, receiving some type of code or confirmation on the display. This code or confirmation could be a number or it could actually be a barcode on the display. The barcode could be presented to a cashier and the cashier could scan this barcode for completion of the transaction.

It will be appreciated by those skilled in the art having the benefit of this disclosure that the transaction system described herein provides a dynamically configurable system including terminals, which may be configured to provide a wide variety of services based on selected criteria. It should be understood that the drawings and detailed description herein are to be regarded in an illustrative rather than a restrictive manner, and are not intended to be limiting to the particular forms and examples disclosed. On the contrary, included are any further modifications, changes, rearrangements, substitutions, alternatives, design choices, and embodiments apparent to those of ordinary skill in the art, without departing from the spirit and scope hereof, as defined by the following claims. Thus, it is intended that the following claims be interpreted to embrace all such further modifications, changes, rearrangements, substitutions, alternatives, design choices, and embodiments.

What is claimed is:

1. A system for providing access to a plurality of services from service providers to users at remote locations, comprising:

a plurality of resource managers, each disposed at a given one of the remote locations, each of the resource managers including a processing platform running an operating system for interfacing with a user through one or more physical resources to provide access to a user selected one of the services;

each of the resource managers further comprising a data store including configuration information, the configuration information identifying external services available to a user from the resource manager, wherein there are multiple configurations stored in the data store, each associated with one of a plurality of predetermined external services, the configuration information for each external service identifying one or more of the available physical system resources required to access the predetermined external service, the data store further comprising a series of instructions to initiate a user identity session whereby the user interfaces with the resource manager with one or more of the physical system resources to open the user identity session wherein the user can access multiple ones of the external services within a single identity session;

a central processing center for communicating with each of the plurality of resource managers and with each of the plurality of services providers and operating in conjunction with the resource managers to execute a predetermined sequence of actions for accessing a desired one of the services from the service providers providing such service; wherein

some of the plurality of resource managers requesting a desired one of the services, the resource managers requesting a desired one of the services and managing the one or more physical resources required for execution of a portion of the predetermined sequence of actions required for the requested service to interface with a user; and

the central processing center executing the remaining portion of the predetermined sequence of actions required for the requested service to interface with a user.

2. The system of claim **1** further comprising a plurality of physical system resource interfaces for interfacing the operating system with available physical system resources, the

physical system resources enabling a user to access a plurality of predetermined external services provided by third party service providers.

3. The system of claim **1**, wherein multiple ones of configuration information are configured to access one or more available physical resources to enable a user to access a service associated with the configuration information.

4. The system of claim **1** wherein each of the resource managers utilizes configuration information for a user selected one of the services to operate required ones of the physical system resources according to a predetermined sequence of actions defined by the configuration information to acquire information necessary to conduct a transaction utilizing the user selected one of the services.

5. The system of claim **4** wherein the resource manager includes a communication resource for communicating with the central processing center and wherein the acquired information is transmitted to the central processing center whereby the central processing center executes a predetermined sequence of actions upon receipt of the information.

6. The system of claim **5** wherein the central processing center includes one or more communication resources enabling the central processing center to transmit the acquired information to a third party service provider enabling the user of the resource manager to access a service provided by the third party service provider.

7. The system of claim **1** wherein each resource manager includes a communications resource for communicating with the central processing center and wherein each resource manager transmits a message at predetermined intervals to the central processing center including the status of physical system resources available to the resource manager, whereupon the central processing center may enable or disable selected services on the resource manager.

8. The system of claim **1** wherein each resource manager includes a communications resource for communicating with the central processing center and wherein each resource manager transmits a message to the central processing center at predetermined intervals including the services enabled on the resource manager whereupon the central processing center may enable or disable selected services on the resource manager.

9. The system of claim **1**, wherein each resource manager includes a communications resource for communicating with the central processing center and wherein each resource manager transmits a message to the central processing center including the services enabled on the resource manager.

* * * * *